Flat 4 Proposed windows

scale 1:20

Living Room
elevation

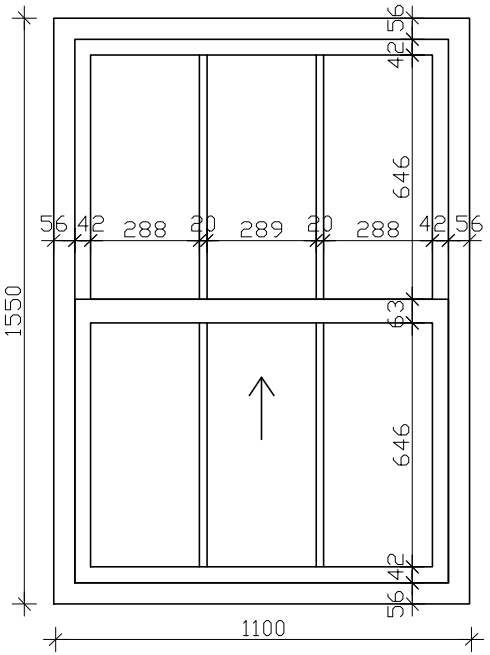

Bedroom
elevation

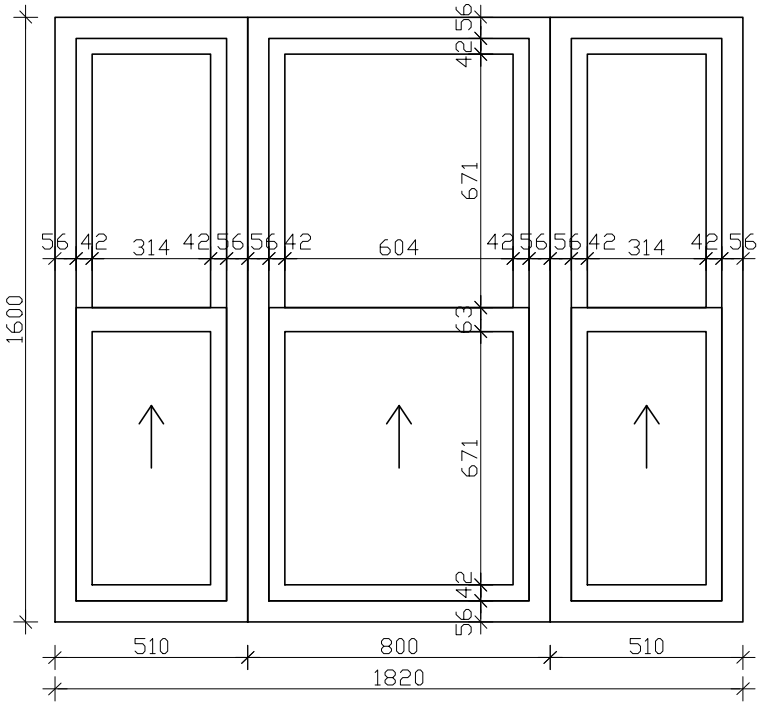

vertical section

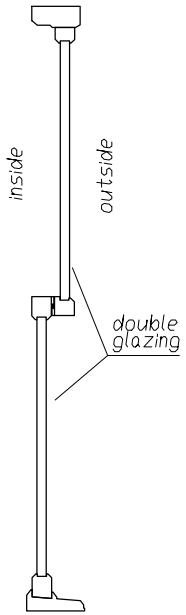

horizontal section
through top sash

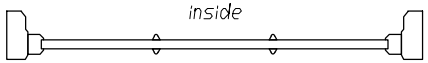

through bottom sash

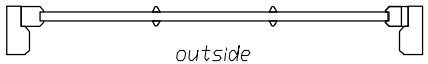

horizontal section
through top sash

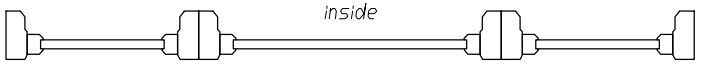

through bottom sash

