Flat 7 Existing windows

scale 1:20

Living Room

elevation

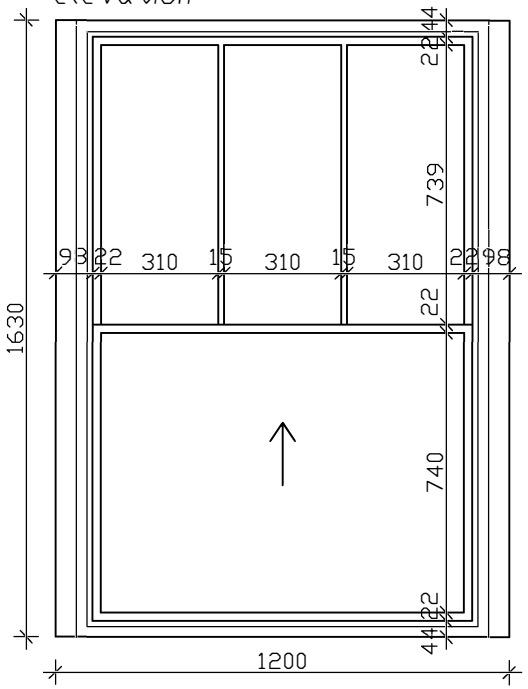

horizontal section

through top sash

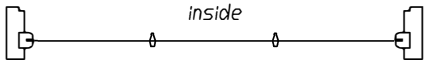

through bottom sash

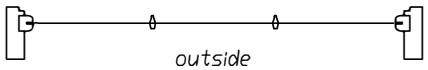

Bedroom

elevation

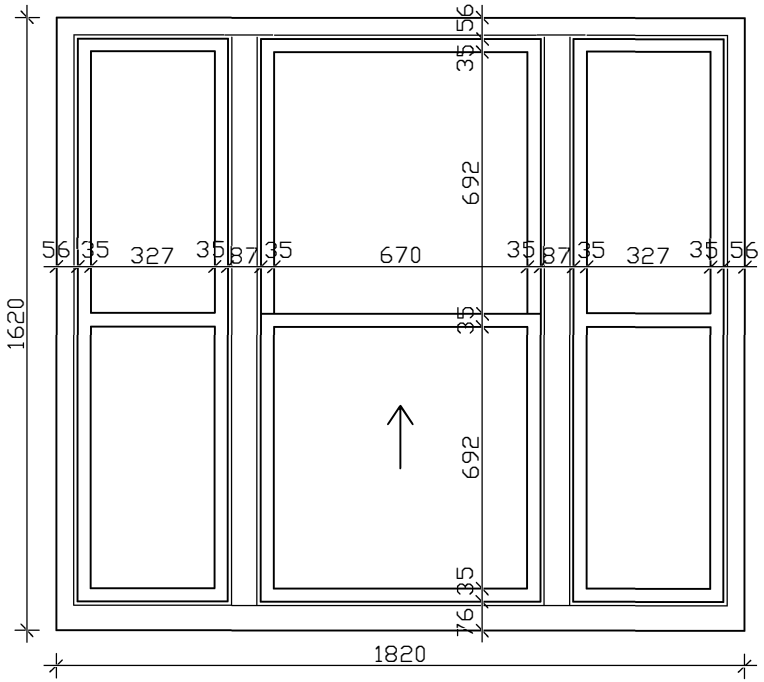

horizontal section

through top sash

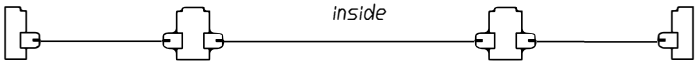

through bottom sash

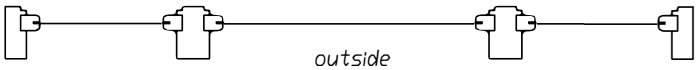

vertical section

