**General Notes:**

Do not scale dimensions from this drawing, unless for Planning purposes.

The Contractor is responsible for checking all dimensions on site prior to commencement of the works.

This drawing is to be read in conjuction with the specification.

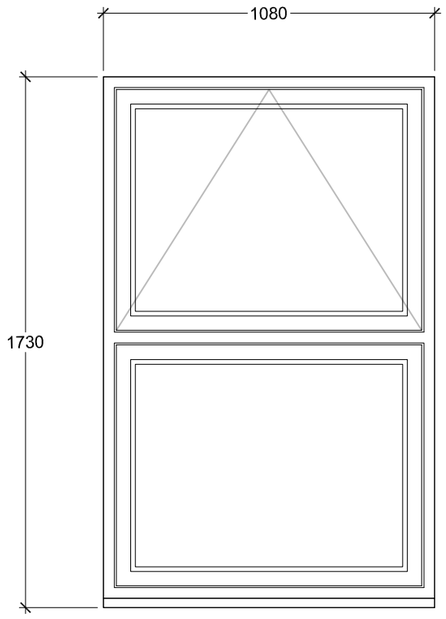


Window A1 - Bedroom

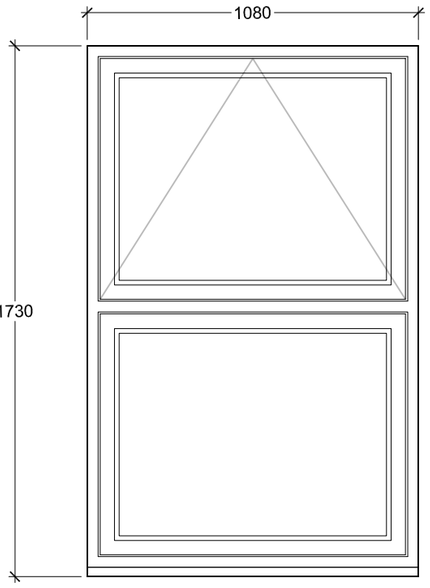


Window A2 - Bedroom

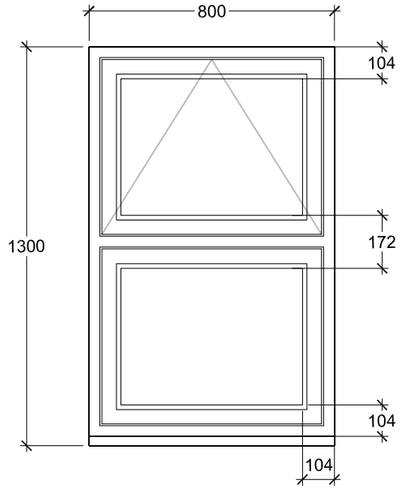


Window B - Hall

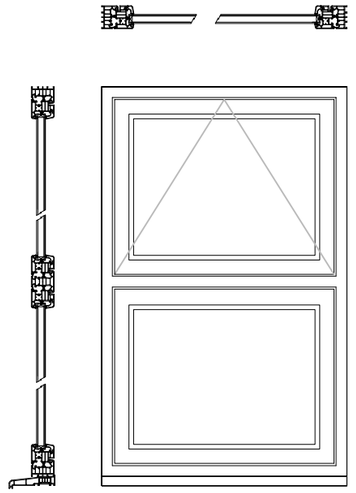

General Profiles

REFER TO WINDOW QUOTATION
for all general dimensions of components

PROPOSED WINDOWS
PVC OC-Flush Casement windows

PROPOSED PVC WINDOW DETAILS
REFER TO WINDOW QUOTATION

1:20

400mm 0 400mm 800mm 1200mm 1600mm 2000mm

| Revision | Date | Description |
|---|---|---|
| A | 05/12/2024 | Window design changed |

**Brian Elstone Surveying Services Ltd**
Brian Elstone, MCIOB, MCABE
Building Surveyor and Architectural Consultant
CDM Consultant
1 Herne Court, Station Road, Rustington,
West Sussex, BN16 3BQ
Phone: 01903 784884, Mobile: 07710 593021.
Email: brian@elstone.biz

Client:
Ms H. Beers, Flat 2 5 Cowper Road, Worthing, BN11 4PD

Project:
Window Replacement

Drawing Title:
Proposed Windows sheet 1

| Scale: | Date: | Drawn By: |
|---|---|---|
| 1:20 | 17/09/2024 | BE |

| Drawing Number: | Revision: |
|---|---|
| 1671/003 | A |