General Notes:

Do not scale dimensions from this drawing, unless for Planning purposes.

The Contractor is responsible for checking all dimensions on site prior to commencement of the works.

This drawing is to be read in conjuction with the specification.

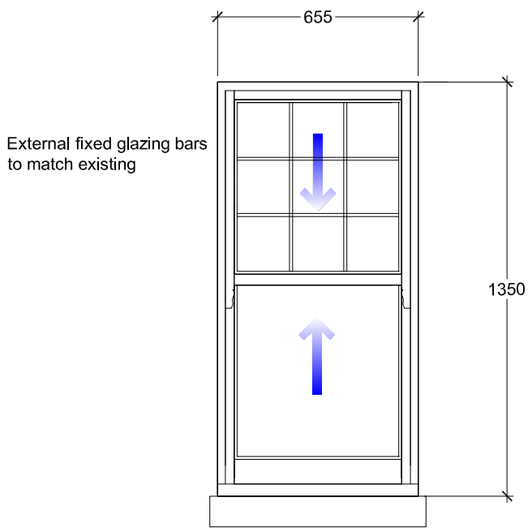

Window E - Bathroom
"Ultimate Rose Sliding Sash"

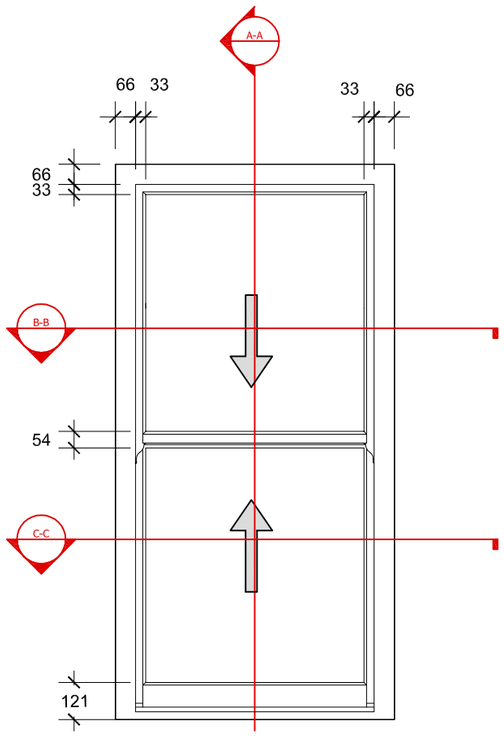

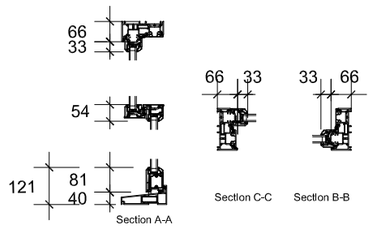

Ultimate Rose Sliding Sash with narrow profile sections to match existing front elevations

1:20

400mm 0 400mm 800mm 1200mm 1600mm 2000mm

Brian Elstone Surveying Services Ltd
Brian Elstone, MCIOB, MCABE
Building Surveyor and Architectural Consultant
CDM Consultant
1 Herne Court, Station Road, Rustington,
West Sussex, BN16 3BQ
Phone: 01903 784884, Mobile: 07710 593021.
Email: brian@elstone.biz

Client:
Ms H. Beers, Flat 2 5 Cowper Road, Worthing, BN11 4PD

Project:
Window Replacement

Drawing Title:
Proposed Windows sheet 3 Window Reference "E"

Revision	Date	Description

Scale:	Date:	Drawn By:
1:20	05/12/2024	BE

Drawing Number:	Revision:
1671/005	A