Adur & Worthing councils

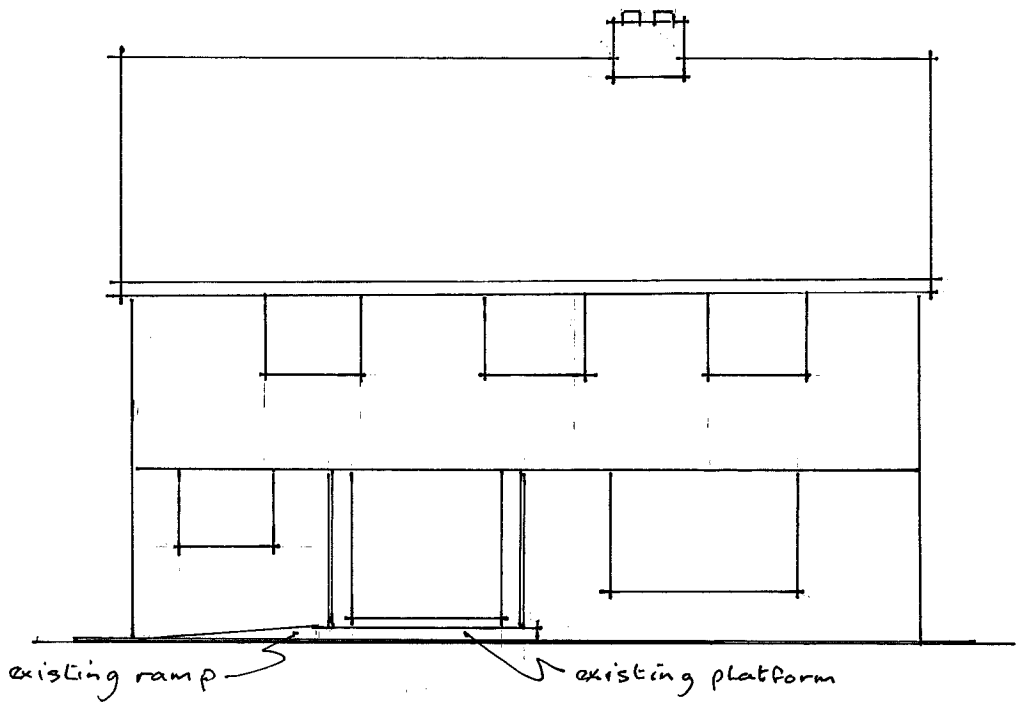

Existing Front Elevation (south)

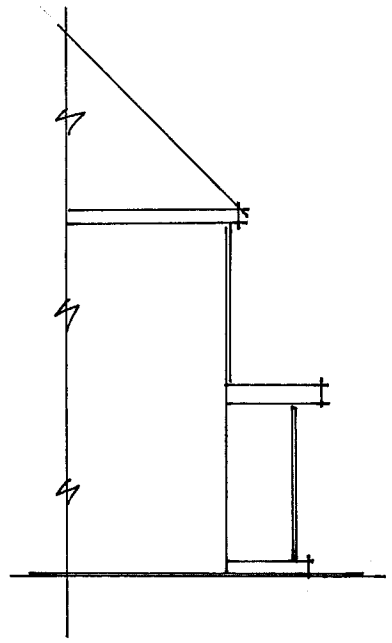

Existing Side Elevation (west)

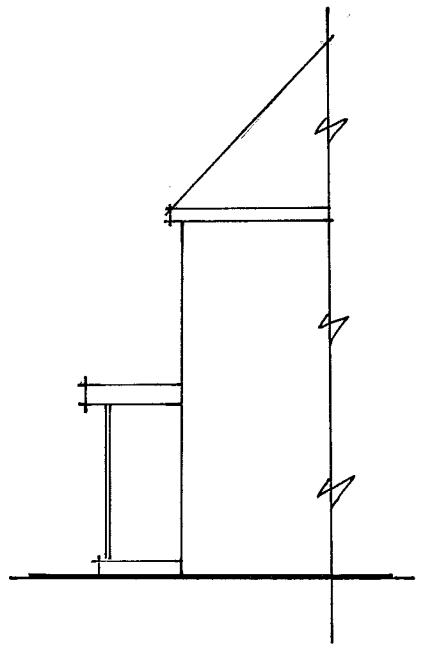

Existing Side Elevation (east)

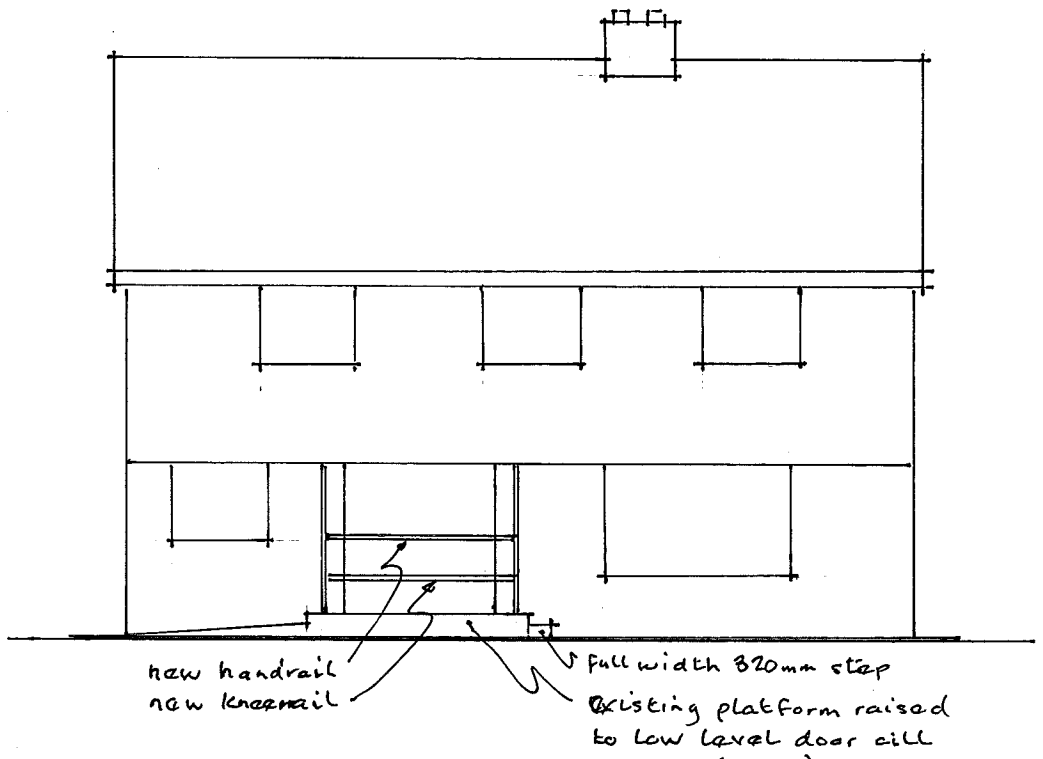

Proposed Front Elevation (south)

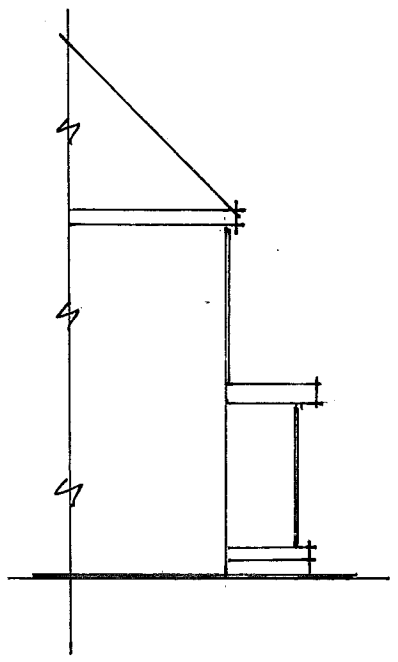

Proposed Side Elevation (west)

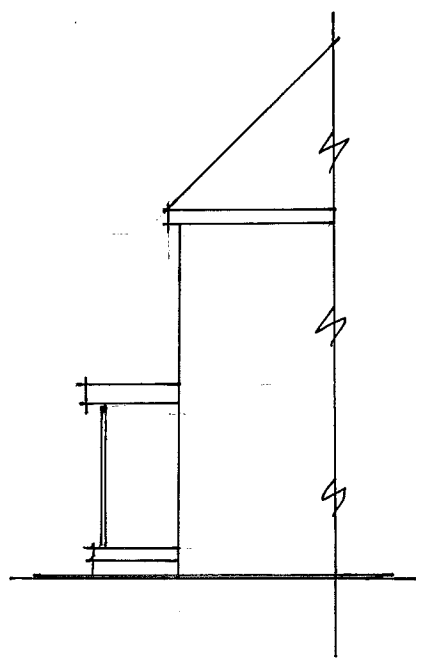

Proposed Side Elevation (east)

NOTES:

Existing platform raised to height of low level door sill.

Concrete to be CP20 with brush finish to give slip resistance.

New step to East side to be full width with 320 mm going.

Kee Klamp handrail & kneerail between canopy supports

ADUR DISTRICT COUNCIL

Adur & Worthing Councils, Portland House, Richmond Road, Worthing, W. Sussex, BN11 1HS
web: www.adur.gov.uk www.worthing.gov.uk

Worthing BOROUGH COUNCIL

Platform & step with hand rail : Mr G Button
@ 23 Whitelot Way, Southwick, BN42 4YF
Scale : 1:100 - Date : Sept. 2016 - Drg. No. 1