TITLE	Bike Compound 2	SCALE	1:25	DRAWN		Dwg No.	
	Finish:	THE BIKE STORAGE COMPANY					
	Material:						

ANGLES ± 1/2°
TWO DECIMAL PLACES ± 0.03
ONE DECIMAL PLACE ± 0.25
NO DECIMAL PLACE ± 0.4
FABRICATION/SHEET ± 1.00
ALL DIMS IN MM.
UNSPECIFIED TOLERANCES

A3

DATE 10/02/2016

DATE	
PLAN	AWDM\ 09/11/18
PLANNING SERVICES	
ADUR & WORTHING	
VALID	

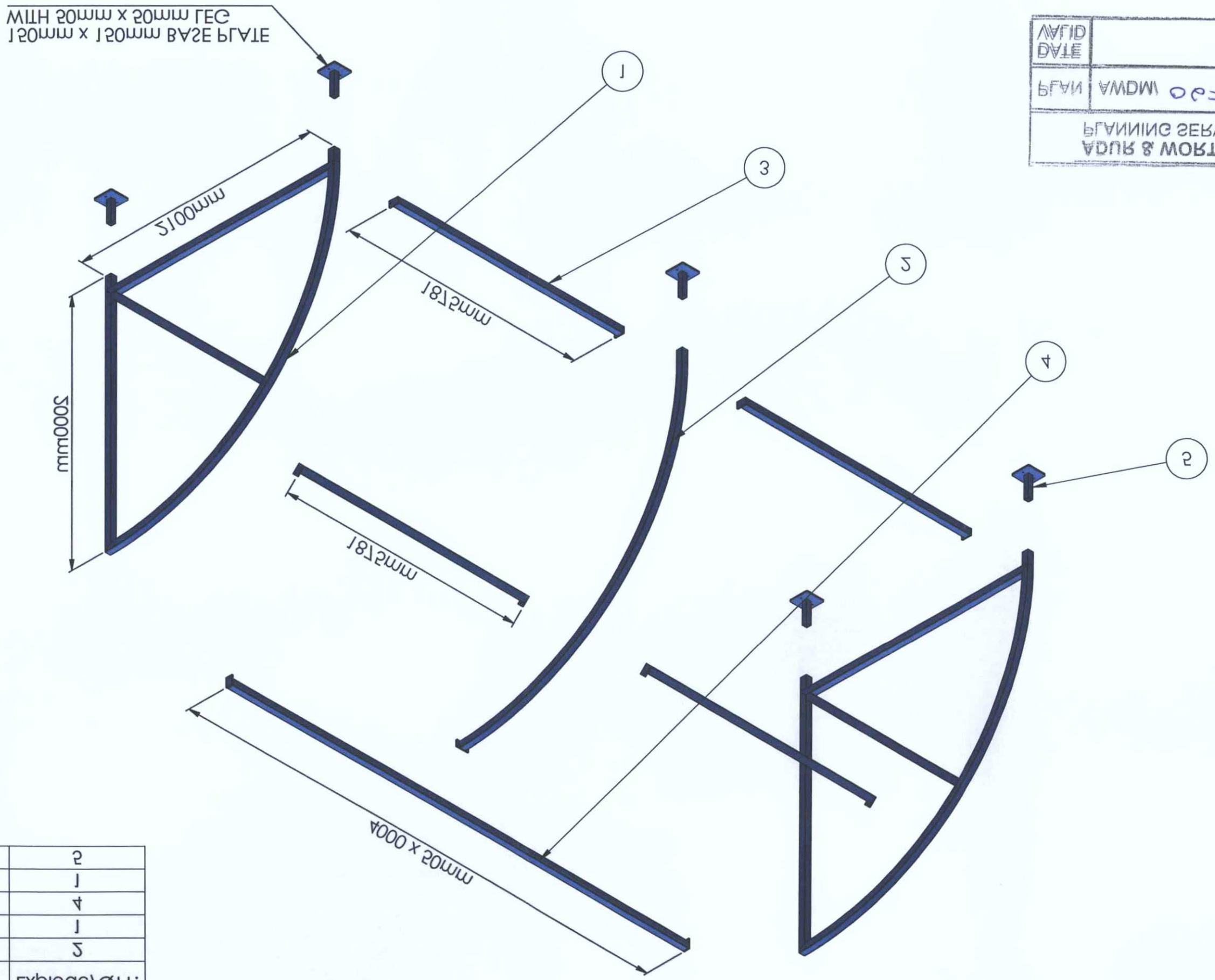

L: 2100mm
D: 2100mm
H: 2100mm

OVERALL DIMS::

ALL 50mm x 50mm BOX TUBING

ITEM NO.:	DESCRIPTION	Explode\QTY.
1	Frame Profile	2
2	Middle Frame	1
3	Cross Bar - 1962.5	4
4	Cross Bar - 3975	1
5	Foot	5