**General Notes:**

Do not scale dimensions from this drawing, unless for Planning purposes.

The Contractor is responsible for checking all dimensions on site prior to commencement of the works.

This drawing is to be read in conjuction with the specification.

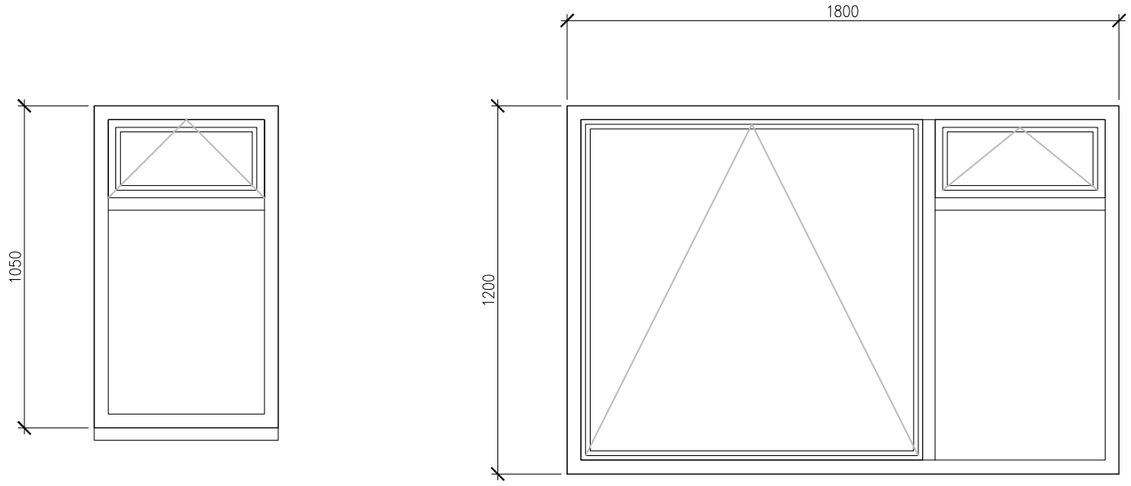


Original windows, Aluminum frames with timber sub frames.

W4

W5

**Brian Elstone Surveying Services Ltd**
Brian Elstone, MCIOB, IMaPS, FCABE
Building Surveyor and Architectural Consultant
CDM Consultant
1 Herne Court, Station Road, Rustington,
West Sussex, BN16 3BQ
Phone: 01903 784884, Mobile: 07710 593021.
Email: brian@elstone.biz

Client:
Mr P. Barrett, 48 Black Swan lane, Luton, LU3 2LX

Project:
Replacement windows, Flat 4 Kenwood Quays, Old Salts Farm Road, Lancing, West Sussex BN15 8JH

Drawing Title:
Existing Windows W4 & W5

| Revision | Date | Description |
|---|---|---|
| | | |

| Scale: | Date: | Drawn By: |
|---|---|---|
| 1:20 | 17/01/23 | BE |

| Drawing Number: | Revision: |
|---|---|
| 1574/003 | - |