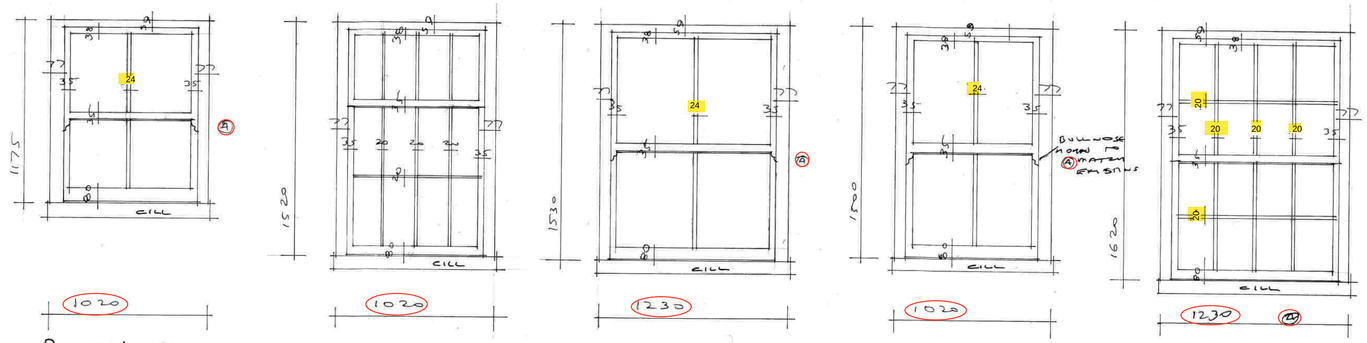

Proposed 1:20

WHITE PAINTED TIMBER — DOUBLE GLAZED

① ② ③ ④ ⑤

0 0.2 0.4 0.6 0.8 1m

1:20 @ A1

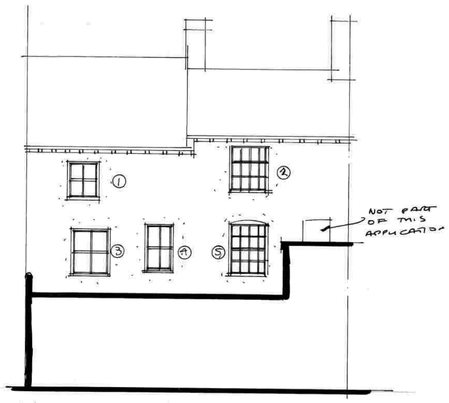

West elevation 1:100



Site plan 1:1250

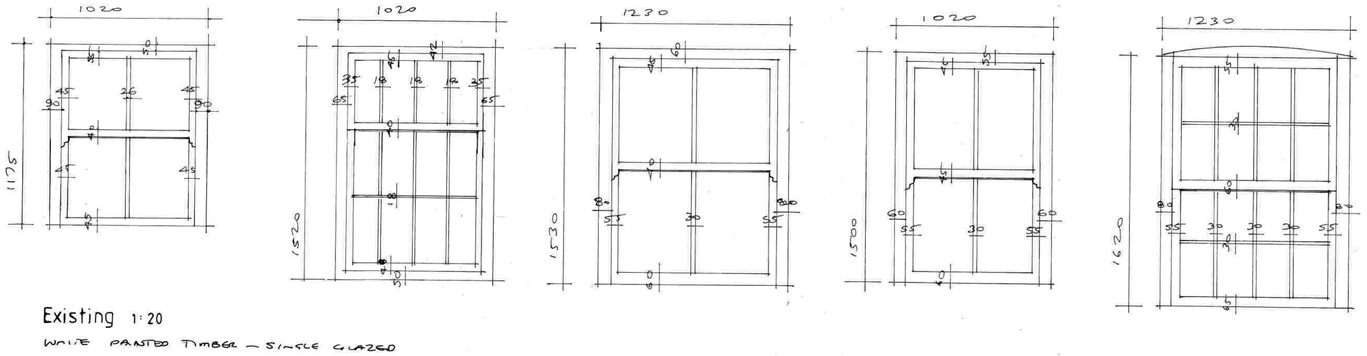

Existing 1:20

WHITE PAINTED TIMBER — SINGLE GLAZED

0 1 2 3m 1:50 @ A1

0 1 2 3 4 5m 1:100 @ A1

0 10 20 30m 1:500 @ A1

0 10 20 30 40 50m 1:1250 @ A1

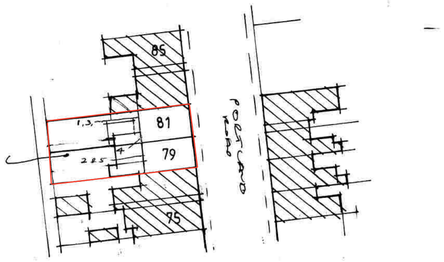

Block plan 1:500

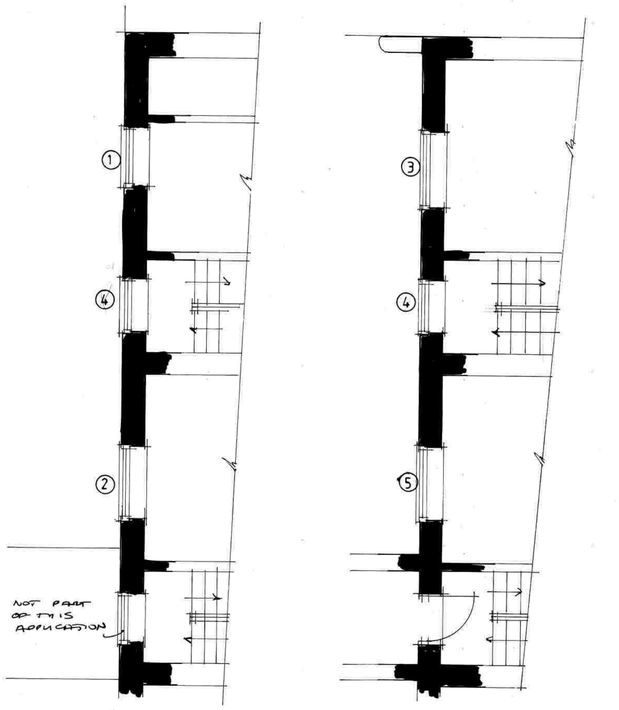

Second floor 1:50

First floor 1:50

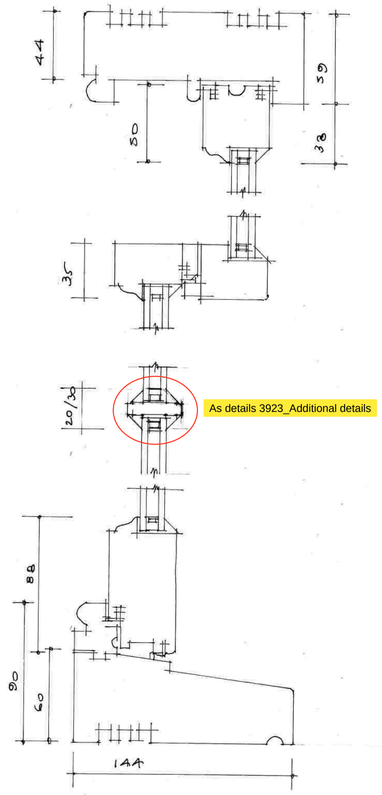

Proposed section 1:2

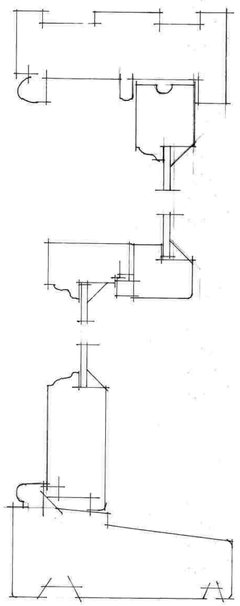

Existing section 1:2

0 20 40 60 80 100 200mm 1:2 @ A1

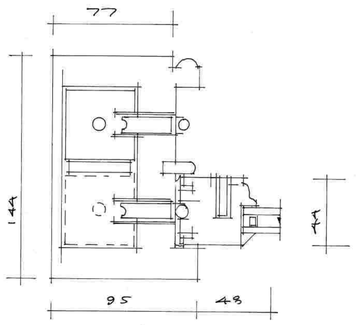

Upper jamb 1:2

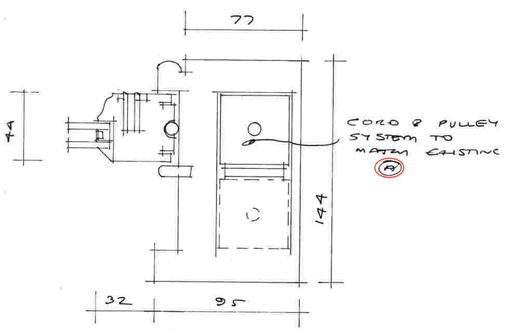

Lower jamb 1:2

AJ SALTER & SON
Architectural Technicians
and Surveyors
50 WINDSOR ROAD, WORTHING,
WEST SUSSEX, BN11 2LY
Tel/Fax: (01903 209496)
E-mail: ajsalterandson@hotmail.com

C			
B	To TP requirements	March 24	IS
A	TO TP ROOF	MAR 24	B
Client	P. Wilson Esq.		
Address	HARE AND HOUNDS PH : Worthing 79-81 PORTLAND ROAD		
Drawing	REPLACEMENT WINDOWS	No.	3923:1 B
Scale	1:2 1:20 1:50 1:100 1:500 1:1250	Drawn	B
		Date	DEC '23