Form Ref. No.

ADUR
DISTRICT COUNCIL

[redacted]

# APPLICATION FOR CONSENT TO DISPLAY ADVERTISEMENTS

Town and Country Planning Act 1990
Town and Country Planning (Control of Advertisements) Regulations 1992

ADUR DISTRICT COUNCIL
PLANNING DIVISION
PLAN No. A/0/00291/07
RECEIVED 16 JAN 2007

Please read the notes before you fill in this form.

## 1 Applicant

| | |
|---|---|
| Title | TESCO STORES LIMITED |
| Forenames | |
| Surname | N/A |
| Address | CIRRUS BUILDINGS<br>SHIRE PARK<br><br>WELWYN GARDEN CITY<br>HERTS<br>AL7 1AB |
| Telephone | |
| Work | |
| Fax | |
| Email | |

## Agent (if any)

| | |
|---|---|
| Title | SAUNDERS PARTNERSHIP ARCHITECTS |
| Forenames | |
| Lastname | N/A |
| Address | STUDIO FOUR<br>37 BROADWATER ROAD<br><br>WELWYN GARDEN CITY<br>HERTS<br>AL7 3AX |
| Telephone | 01707 385300 |
| Work | |
| Fax | 0870 6222135 |
| Email | PAUL.SAMMELS@SAUNDERSARCHITECTS.COM |

## 2 Please give the address or location of the site for the advertisements.

(You must provide plans showing the exact position)

| | |
|---|---|
| Address | TESCO STORE<br>HOLMBUSH CENTRE<br>UPPER SHOREHAM ROAD<br>SHOREHAM BY SEA<br>WEST SUSSEX<br>BN43 6TD |
| Location | |

## 3 Please number your plans and write the numbers and scales against the titles here

(Please see note 7)

| | Number | Scale |
|---|---|---|
| Location Plan | REFER DRWG ISSUE SHEET | REFER DRWG ISSUE SHEET |
| Block Plan | REFER DRWG ISSUE SHEET | REFER DRWG ISSUE SHEET |
| Elevation | REFER DRWG ISSUE SHEET | REFER DRWG ISSUE SHEET |
| Detailed Plans | REFER DRWG ISSUE SHEET | REFER DRWG ISSUE SHEET |

Please enclose four copies of this form and four sets of plans.

**4 Does the applicant own or lease the land?** Yes

**If "No" does the applicant have the owner's permission to display the advertisements, or the permission of another person who can allow the applicant to use the land to display the advertisement?**

5 **Are the advertisements already being displayed?** No

If "Yes", please give the date they were first displayed. (Please see note 9)

6 **Are there any advertisements that will be removed?**

If "Yes", please show their position on the block plan

7 **Please give details of advertisements**
(Please see note 3)

| | Number | Height | Width | Depth |
|---|---|---|---|---|
| Hoarding | REFER TO DETAILED DRWGS | | | |
| Fascia | REFER TO DETAILED DRWGS | | | |
| Box Sign | REFER TO DETAILED DRWGS | | | |
| Flag | REFER TO DETAILED DRWGS | | | |
| Pole | REFER TO DETAILED DRWGS | | | |

**Other** (please give details)

| Type of Sign | Number | Height | Width | Depth |
|---|---|---|---|---|
| REF DETAILED DRWGS | | | | |

For **Fascia** signs only, what is the height of the top of the sign above the ground? (metres) REF DRGWS

How far do the advertisements project from the face of the building? (metres) REF DRGWS

**Please give details of the materials and colour to be used for:**

**The Framework**

| | |
|---|---|
| Materials | REF DRGWS |
| Colour | REF DRGWS |

**The Face of the Board and Any Letters**

| | |
|---|---|
| Materials | REF DRGWS |
| Colour | REF DRGWS |

**The Bracket**

| | |
|---|---|
| Materials | REF DRGWS |
| Colour | REF DRGWS |

**Lighting and Display**

**Will the advertisements have any lighting?** Yes

**If "Yes", will the lighting be** Inside

**What type of lighting will it be?** INTERNALLY ILLUMINATED

**If advert is internally illuminated, how bright will it be?** SEE DESIGN DOCS

**Please tell us the period for which you would like to display the advertisements.**

From PERMANENTLY To PERMANENTLY

8. Please state the fee enclosed (please see note 8) £ 75·00

Signature: [redacted] Date: 9/1/07

Please print your name: [redacted]

## Control of Advertisements - Notes

**It is an offence to put up many types of advertisements without consent.**
**We usually take legal action against people who do this.**
**Please do not put up your advertisements until you have consent.**

1. Under the Town and Country Planning (Control of Advertisement) Regulations 1992 (as amended) you need express consent to display many types of advertisements. Please refer to the current regulations for details or ask a planning officer

2. Planning officers can normally give you help and advice if you show them what you want to do before you hand in your application. Please follow the advice below before you make your application. If what you want to do does not meet the standards set out in the guide, please write to us for advice.

3. Definition of types of advertisements :
·Hoarding : Usually a large sign containing poster panels which can be placed at the entrance to or sides of building sites or at important sites on the roadside.
· Fascia sign: A sign attached to a building, for example, above a shopfront.
· Box sign: A type of sign which projects from the surface it is mounted on, for example, at the front of a building.
· Flag: Usually a sign in fabric or plastic in the shape of a flag attached to a single flagpole.
· Pole sign: A sign attached to a pole or curved to form a pole, for example, on the forecourt of a garage.

4. Consent is normally given for five years but advertisements are allowed to remain beyond the five year period (subject to the power of the Council to require them to be removed if necessary).

5. You must have consent from the owner of the land or anyone else with the right to give consent before you put up the advertisements. It is your responsibility to get this consent.

6. It is your responsibility to get any other necessary permission (for example, planning permission or listed building consent). For more advice, please contact us.

7. You must send us four copies of each of the following plans.
One copy of the plans must be coloured to show the work you are applying for.
· A location plan which will allow us to identify the exact location of the land. It should be at a scale of 1:1250 and the site should be outlined in red.
· A block plan at a scale of at least 1:500 showing the boundaries of the site (highlighted in red) and the exact position of the advertisements.
· Detailed plans of the advertisements at a scale of at least 1:10 showing the layout, wording and colour of the advertisements and the size of the lettering. This plan should also show how you will fix or support the advertisements.
· If the sign is to be displayed on a building, your application should include an elevation of the relevant face of the building at a scale of 1:100 or 1:50. The elevation should show the exact position of the advertisements on the building. If you have photos of the building, you can use them instead of elevation plans as long as you draw in the sign clearly on the photo.
· If the sign is to be illuminated, details of the means of illumination are required, including the luminance in candelas, and the positioning and appearance of any external light fittings.

8. A list of planning fees is available. For more details about fees, please contact the Planning Section on (01273) 263222.

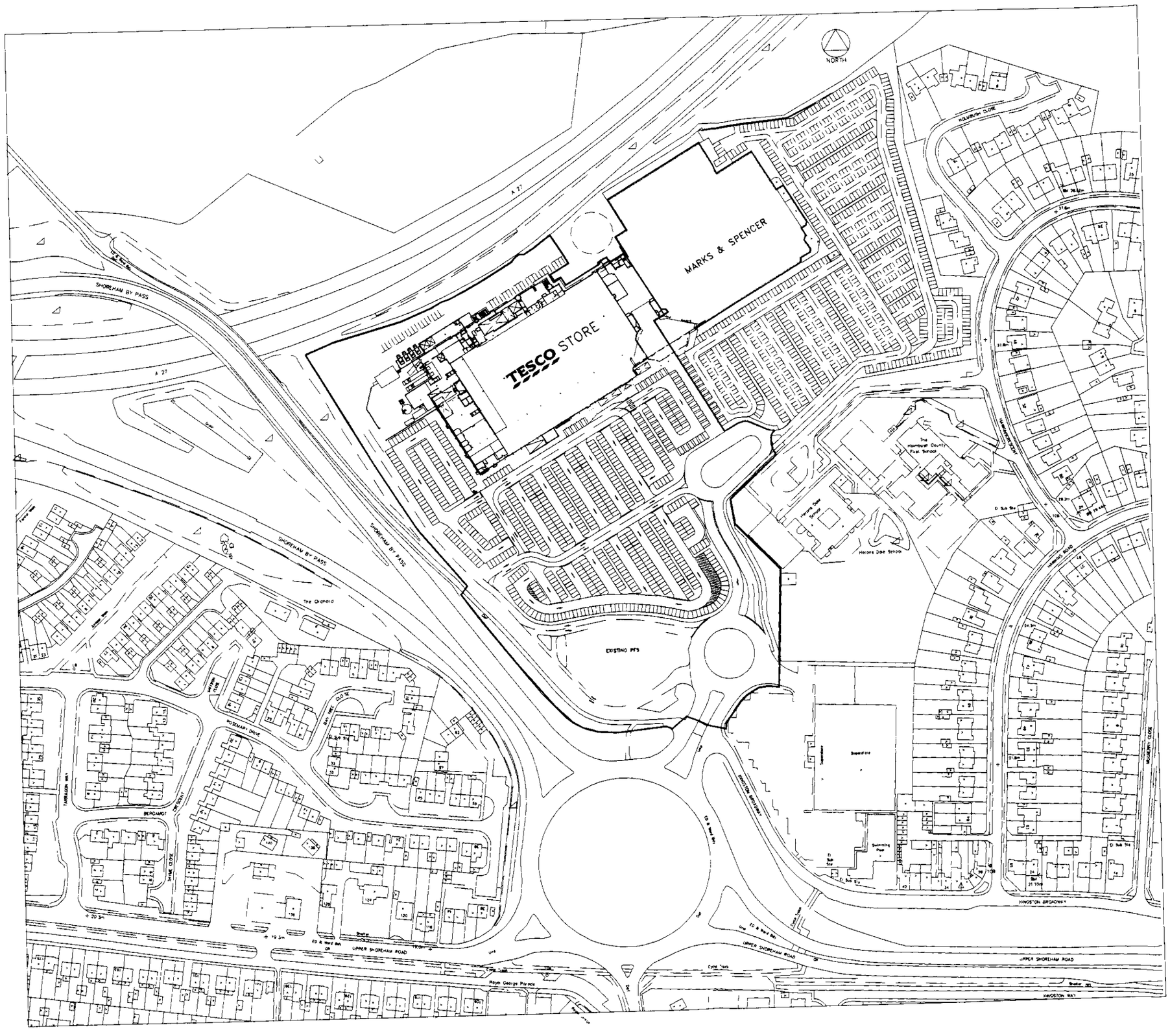


NOTES

No Dimensions to be scaled from this drawing. All stated dimensions to be verified on site and the Architect notified of any discrepancies
This drawing to be read in accordance with the specification/Bills of Quantities and related drawings.

A0c10029167

16 JAN 2007

| REV | DATE | NOTE | JN |
|---|---|---|---|

Project

PROPOSED EXTENSION
TESCO STORE
SHOREHAM

SID No 3178

Title

EXISTING SITE PLAN

| Scale | | Date |
|---|---|---|
| 1:2500 | @A3 | JANUARY 07 |
| Drawn | | Checked |
| DG | | PMS |
| Drawing Number | | Revision |
| 6329/523 | | - |

Saunders Partnership Architects
Studio Four, 37 Broadwater Road, Welwyn Garden City, Hertfordshire, AL7 2AW
Telephone 01707 393300 Facsimile 0870 4222135
E-mail saunders@SaundersArchitects.com

SAUNDERS

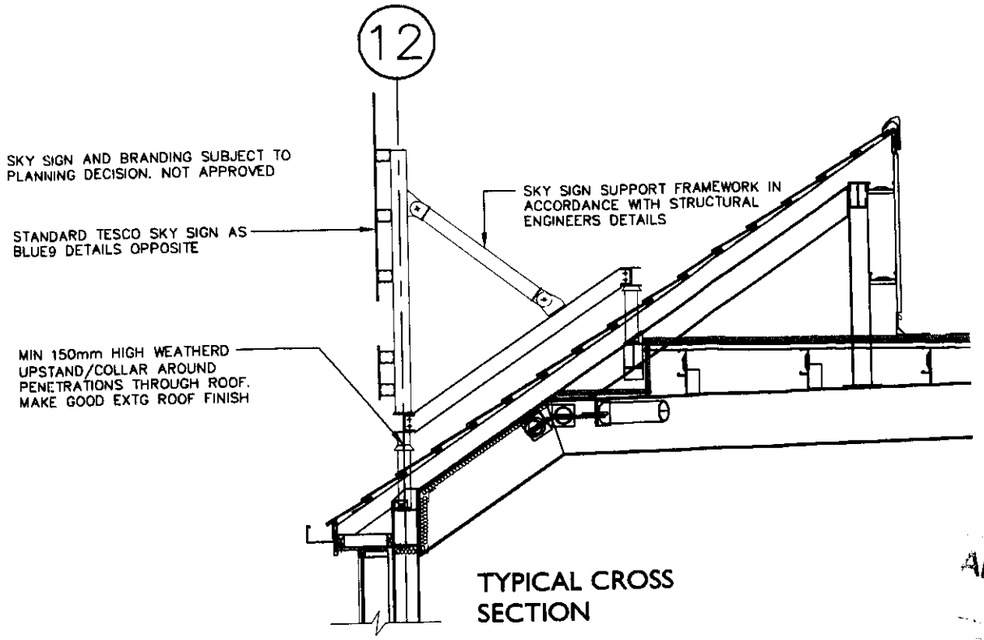


TYPICAL CROSS SECTION

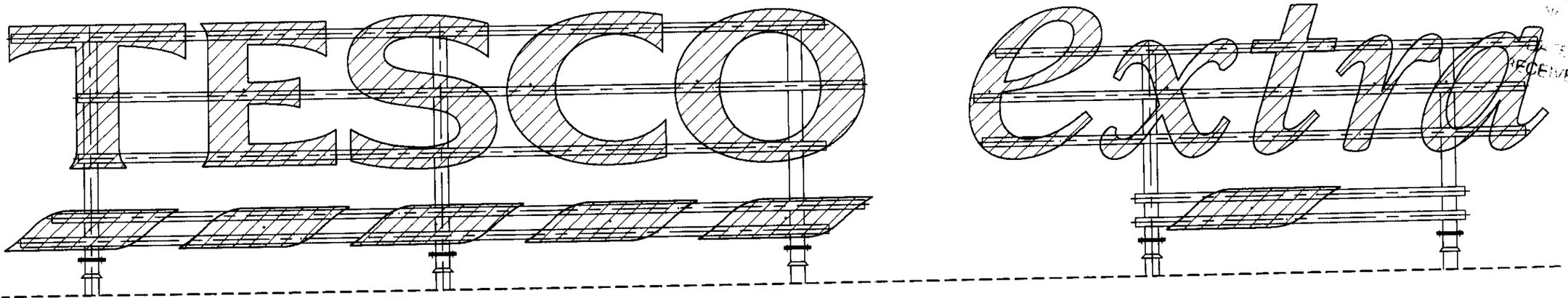


TYPICAL ELEVATION OF SKY SIGN. REFER TO BLUE 9 DOCUMENT FOR EXACT DIMENSIONS

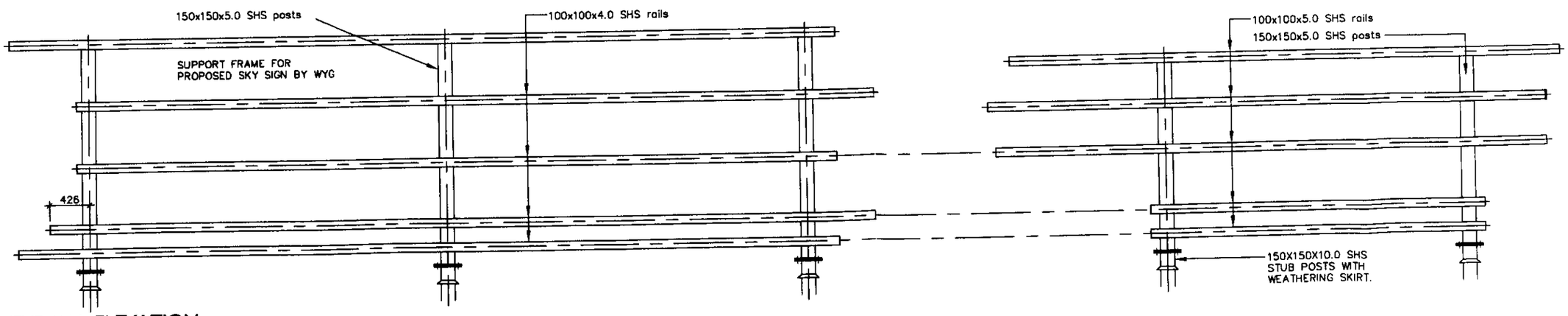


TYPICAL ELEVATION OF SUPPORT FRAME

NOTES

No Dimensions to be scaled from this drawing. All stated dimensions to be verified on site and the Architect notified of any discrepancies.
This drawing to be read in accordance with the specification/Bills of Quantities and related drawings.

ADUR DISTRICT COUNCIL
PLANNING DIVISION
PLAN NO. A0010024107
DATE RECEIVED 10 JAN 2007

FOR CONSTRUCTION

| REV | DATE | NOTE |
|---|---|---|
| A | 18.01.07 | STEEL FRAME DETAILS ADDED FOR PLANNING DEPARTMENT |

TESCO

Project

PROPOSED EXTENSION
TESCO STORE
SHOREHAM

SID No. 3178

Title

PROPOSED SKY SIGN

SAUNDERS

| Scale | Date |
|---|---|
| NTS @A3 | AUGUST 06 |
| Drawn | Checked |
| CH | PMS |

Drawing Number 6329/217 Revision A

Saunders Partnership Architects
Studio Four, 37 Broadwater Road, Welwyn Garden City, Hertfordshire, AL7 3AX
Telephone 01707 388300 Facsimile 0870 4323136
E-Mail saunders@saunderspartnership.com




TESCO Extra

NOTES ©

No Dimensions to be scaled from this drawing. All stated dimensions
to be verified on site and the Architect notified of any discrepancies.
This drawing to be read in accordance with the specification/Bills of Quantities and related drawings

DISTRICT COUNCIL
PLANNING DIVISION
AN
TO
DATE
RECEIVED
16 JAN 2007

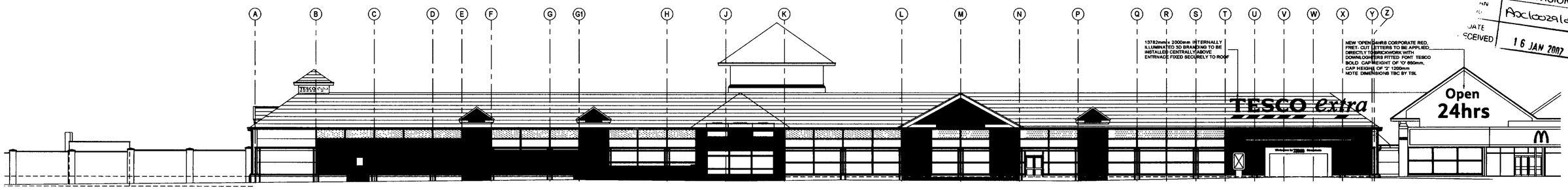


PROPOSED FRONT ELEVATION 1:200

NOTE :-

2 NO. SIGNS FORMING PART OF THIS APPLICATION.

1 NO. TESCO EXTRA SIGN OVER MAIN ENTRNACE.

1 NO. OPEN 24HRS SIGN ON EXISTING GABLE OVER FOYER.

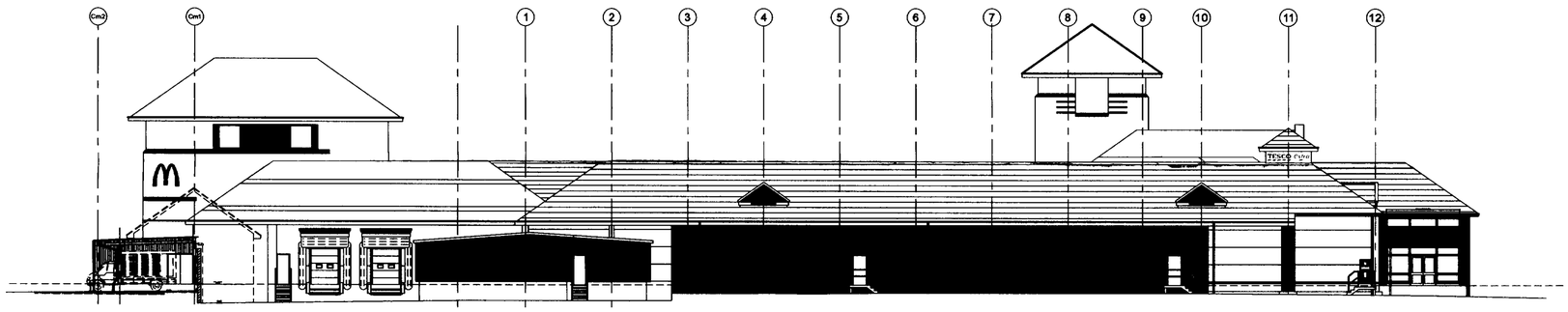


PROPOSED SIDE ELEVATION 1:200

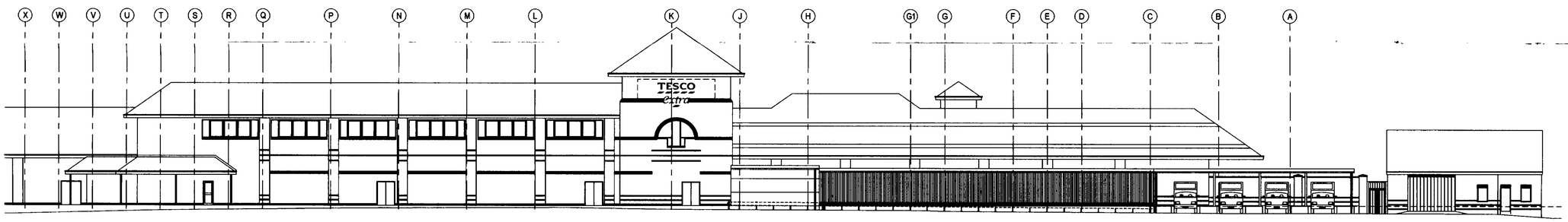


PROPOSED REAR ELEVATION 1:200

PRELIMINARY

| REV | DATE | NOTE | IN |
|---|---|---|---|

TESCO

Project

PROPOSED EXTENSION
TESCO STORE
SHOREHAM

SID No 3178

Title

PROPOSED ELEVATIONS

SAUNDERS

| Scale | Date |
|---|---|
| 1:200 @A1 | JANUARY 07 |
| Drawn | Checked |
| DG | PMS |
| Drawing Number | Revision |
| 6329/306 | - |

Saunders Partnership Architects
Studio Four, 37 Broadwater Road, Welwyn Garden City, Hertfordshire, AL7 3AX
Telephone 01707 385300 Facsimile 0870 622 2135
E-Mail saunders@SaundersArchitects.com