ADUR DISTRICT COUNCIL

Adur District Council

Town and Country Planning Act 1990

Office use
App A/0626/07
Date Rc.
Fee 133 APR 2007

Householder's planning application form

Use this form to apply for planning permission to extend or alter your house or flat, to build a garage or other structure on your property or to create access for a vehicle onto a classified road (please read note 9).

Please read the notes before you fill in this form.

1 Please give the address of the property to be altered or extended.

FLAT 10 RYECROFT COURT
PENHILL ROAD, LANCING
BN 15 8HJ

2 Type of property (please tick)

Detached House	☐	Terraced House	☐	Other (please give details)	☐
Semi-detached House	☐	Flat	☑		

3 Please describe the development you are applying for.

Replacement Windows

4 Applicant (in block capitals)

Full name :	
Address (including postcode):	
MRS MES S. MUSTCHIN	
(As 1 above)	
Phone Number:	
Home: [redacted]	
Work:	
Extension:	
Fax Number:	

Agent (if any)

Full name :	R.V. ROBERTS
Address (including postcode):	
MILL LODGE	
25, DOWNVIEW RD	
WORTHING BN11 4QP	
Phone Number:	
Home:	01903 506050
Work:	
Extension:	
Fax Number:	

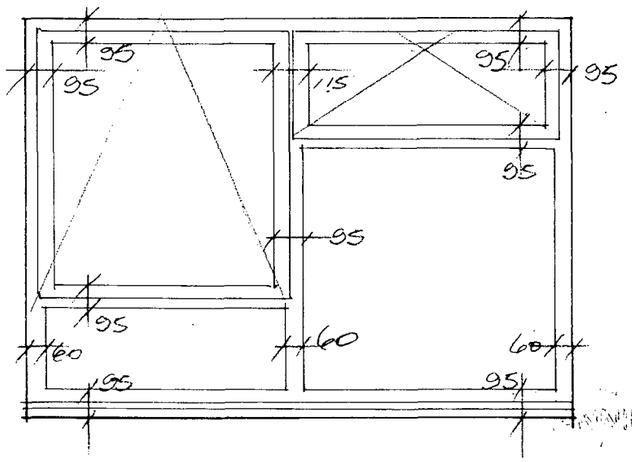

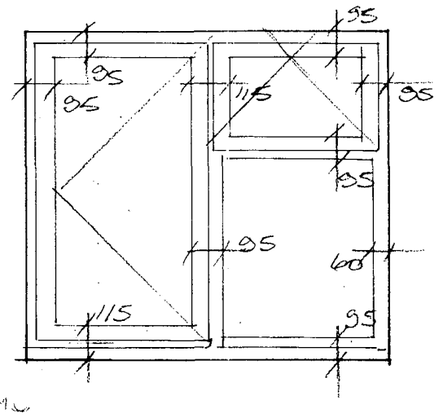

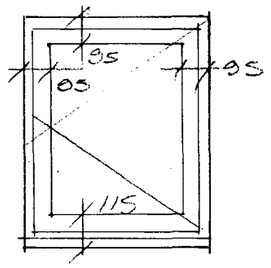

EXISTING

BROWN STAINED
Soft Wood casements
& frames

PLANNING DIVISION
Axonometric
DATE
23 APR 2007

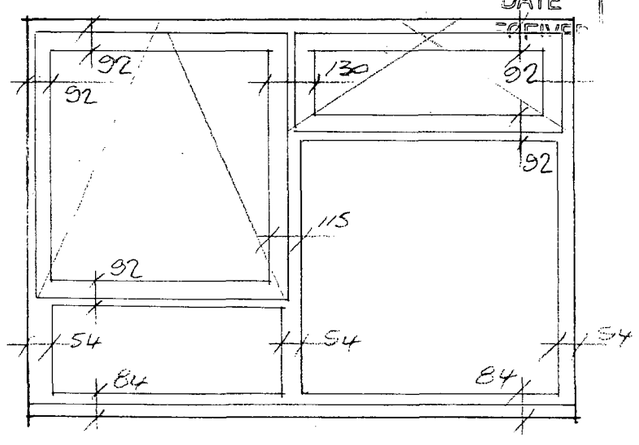

LOUNGE (SOUTH)

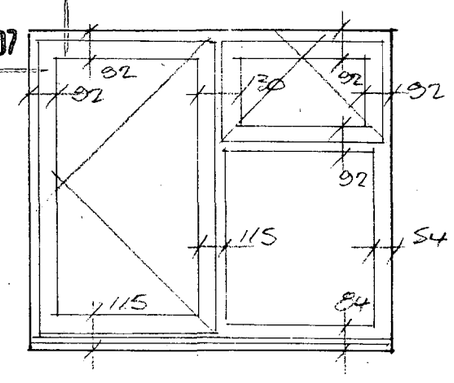

KITCHEN

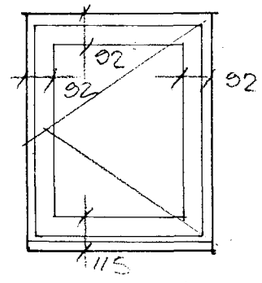

LOUNGE (WEST)

PROPOSED

Brown finish
UPVC

10 RYECROFT COURT
PENHILL ROAD
Lancing

scale 1/20

4473

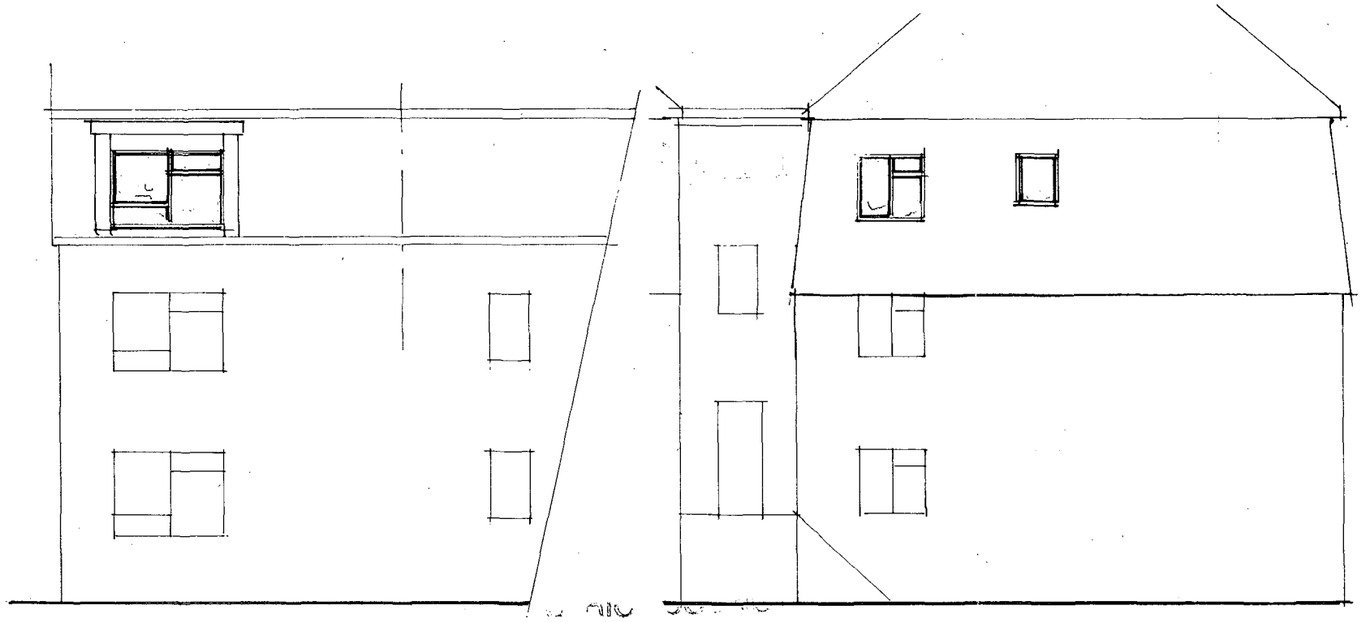

south

west

Existing
Brown stained
standard soft wood
casements & frames

Proposed
Brown finish
UPVC window to
same configurations

...NNING DIVISION
Ard0248/07
DATE
RECEIVED 3 APR 2007

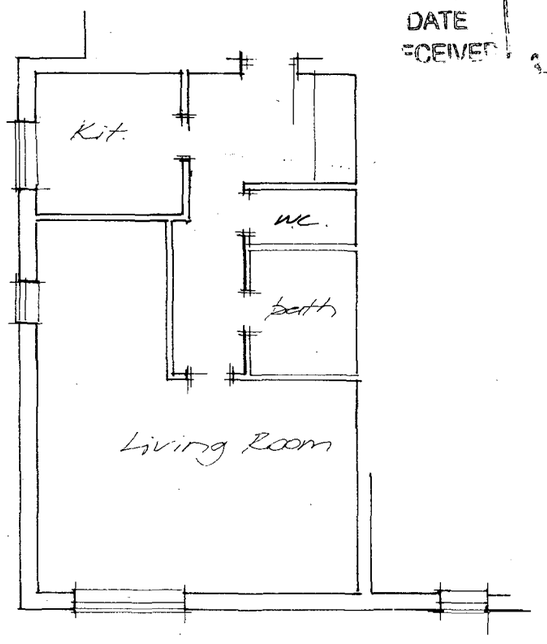

second floor plan

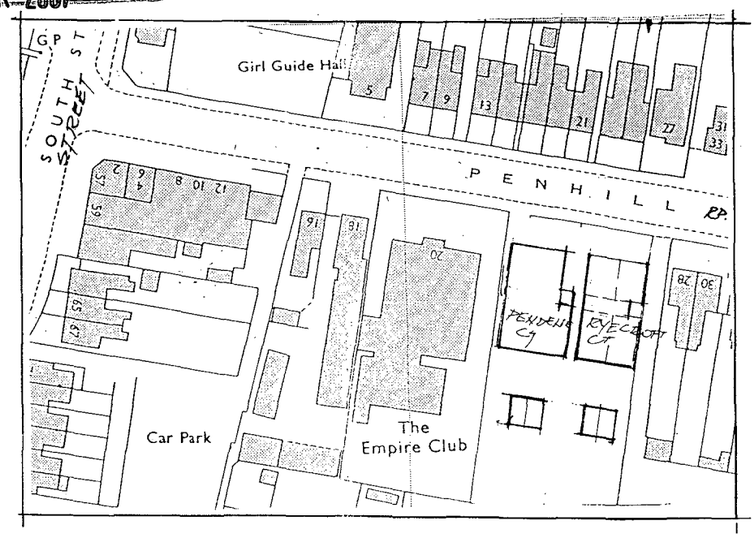

location 1/1250

replacement windows
Illustrative plan &
elevations
Flat 10
RYECROFT COURT,
PENHILL ROAD,
LANCING

for Mr & Mrs S. Mustchin

Scale 1:100
Date April 2007

R.V. Roberts
Worthing 506050

for
Messrs Lancing Double
Glazing

plan no. 4473

5 Please enclose four copies of this form and four sets of plans.
Please number

	Plan number	Scale
Location plan	4473	1/1250
Block plan		
Floor plan	"	1/100
Elevations	"	1/100
Other	Detail	1/20

6 Will the development involve cutting down any trees? Yes ☐ No ☑
If "Yes", please show these clearly on the block plan.

7 Will the development (including any new or altered access affect a public footpath or any other public right of way? Yes ☐ No ☑

8 Does this application require a fee? (See note 3) Yes ☑ No ☐

If "No", please tick the option that applies (See note 3) A ☐ B ☐ C ☐

If "Yes", please state the fee enclosed (See note 4) £ 85.00

Signature:  Date: 19/04/07

Please print your name: R.V. ROBERTS

Certificate under Article 7 of the Town and Country Planning (General Development Procedure) Order 1995

If anyone else owns the land or part of it, you must fill in Certificate B, which you can get from the Planning Section. You must also tell the owner of the land about this application by serving a notice on them. If you own all of the land, you must fill in Certificate A below.

Certificate A

I confirm that:

- Nobody except the applicant was an owner of any part of the land involved at the beginning of the period of 21 days before the date of this application; and
- none of the land this application relates to is an agricultural holding or part of an agricultural holding.

Signature:  Date: 19/04/07

Please print your name: R.V. ROBERTS