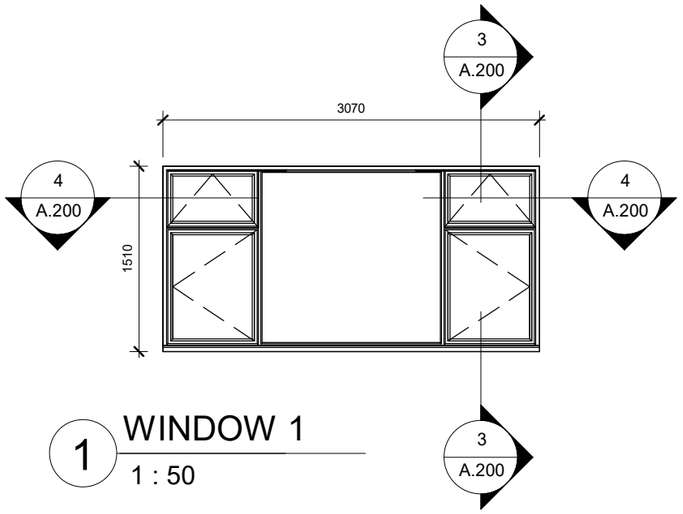

1 WINDOW 1

1 : 50

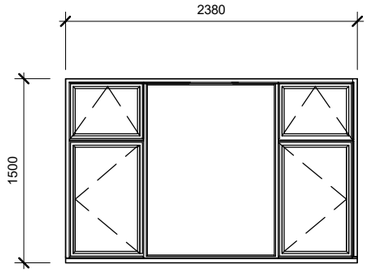

2 WINDOW 2

1 : 50

PROPOSED SPECIFICATION

Type: UPVC Double Glazed Casement Windows

Colour: White to match existing



VISUAL SCALE 1:50 @ A3

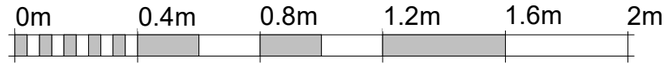

VISUAL SCALE 1:20 @ A3

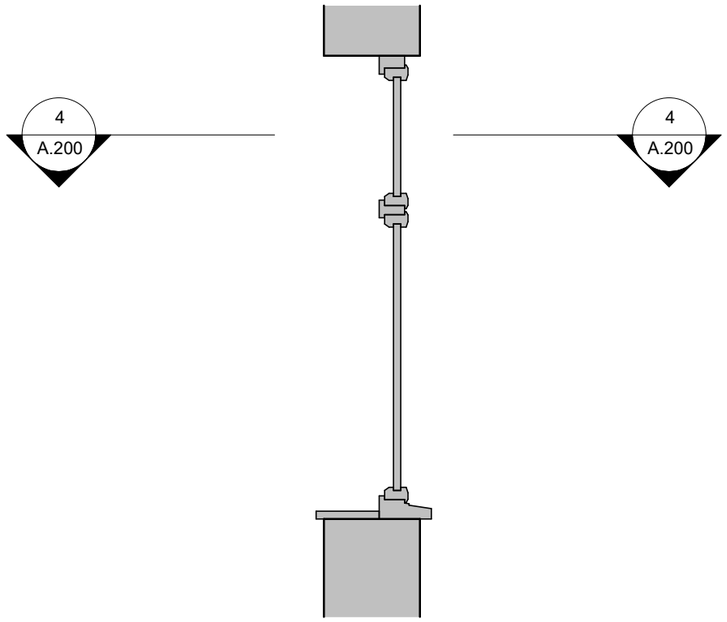

3 TYPICAL SECTION A

1 : 20

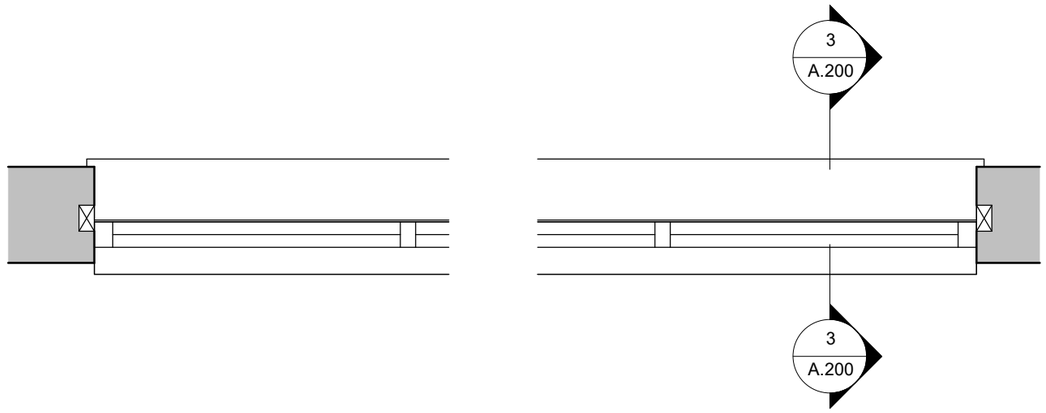

4 TYPICAL SECTION B

1 : 20

KRONA DESIGN
ARCHITECTURAL DESIGN & DRAFTING
4 Union Place | Worthing | BN11 1LG
info@kronadesign.co.uk | kronadesign.co.uk
Tel: 01903 256150 Mob: 07827 994111

PROJECT

Replacement Windows

ADDRESS

Ground Floor Flat
39 Chatsmore Crescent
Goring-by-Sea
West Sussex

TITLE

Window Details

CLIENT

Caryl Williams

DRAWN	STATUS	DATE
JLB	Design	09/12/24

SCALE (@ A3)	PROJECT NUMBER
As indicated	KD.1643

DRAWING NUMBER	REV
A.200	

© KRONA DESIGN