

REAR (SOUTH-WEST)

SIDE (NORTH-WEST)

SIDE (SOUTH-EAST)

FRONT (NORTH-EAST)

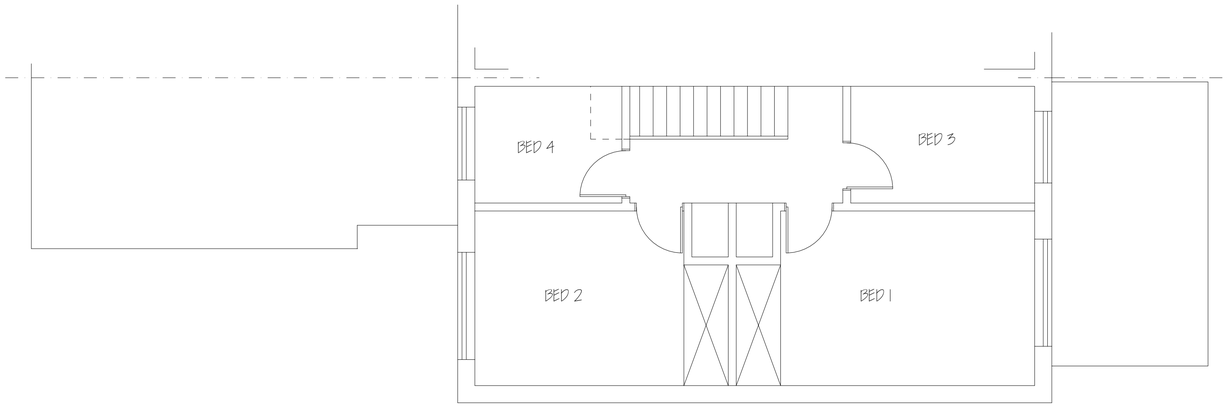

FIRST FLOOR

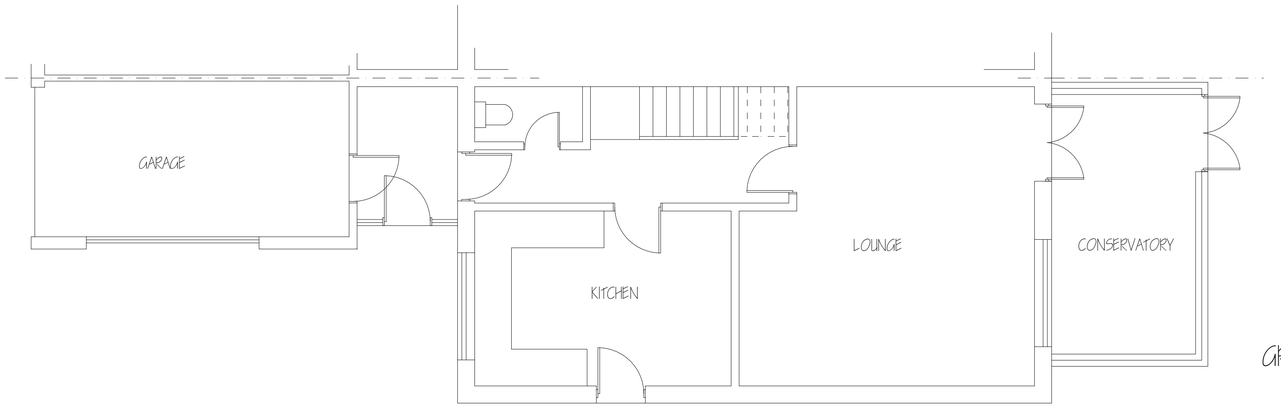

GROUND FLOOR

NORTH

deadspace DESIGNS

PROPOSED LOFT CONVERSION at 11a CHESTER AVENUE, LANCING, WEST SUSSEX, BN15 8PU

DRAWING: EXISTING PLANS AND ELEVATIONS SCALE: PLANS 1:50 . ELEVS 1:100 . @A1 DATE: 14/ 03/ 2022 DRWG No: DS/ PARSONS/ 01

1:50 @ A1 paper size 0 1 2 3m

1:100 @ A1 paper size 0 1 2 3 4 5m