A3 PAPER SIZE

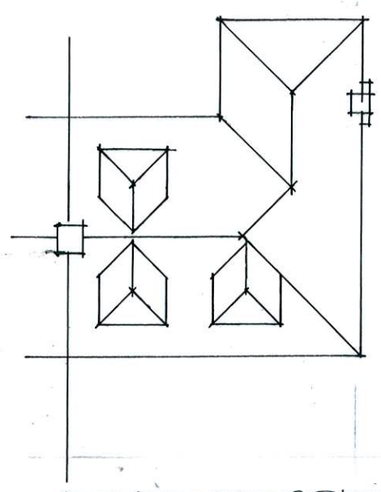

Existing Roof Plan
Scale: 1/200

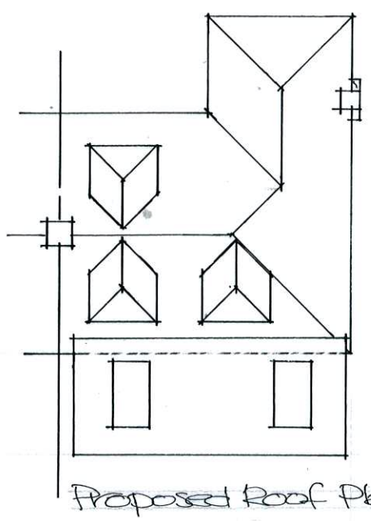

Proposed Roof Plan.

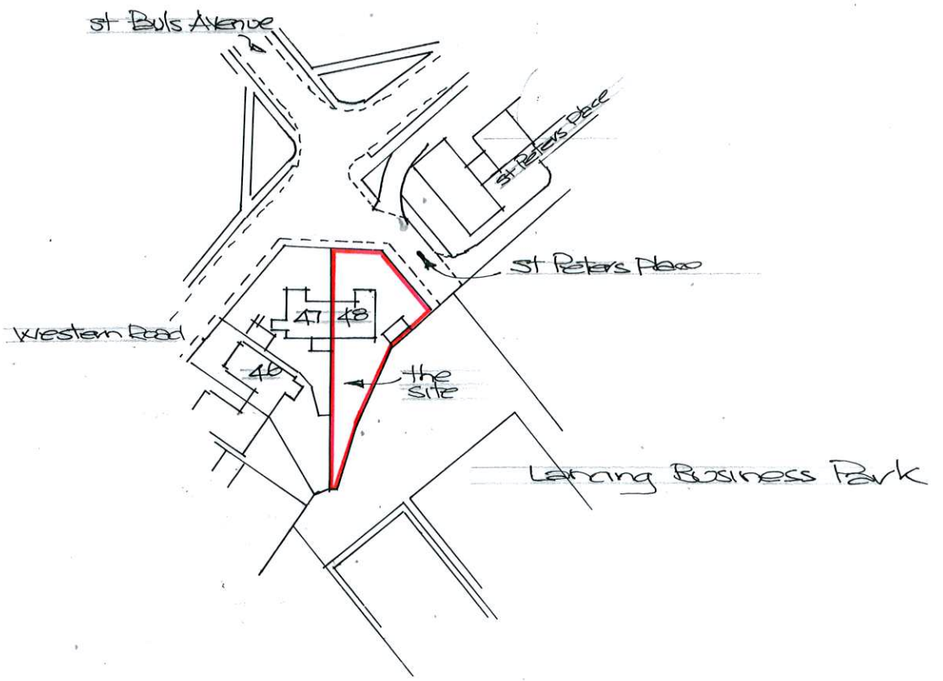

Location Plan
Scale: 1/1250

0 5 10 15 20 25 30 35 40 45 50
m

Site Plan - Scale: 1/500

0 5 10 15 20 25 30 35 40 45 50
m

48 WESTERN ROAD
SOMPTING
WEST SUSSEX BN15 8RZ

Paul Trussler
44 Firle Road
Lancing
West Sussex
BN15 0NZ

Drawing No. 22/48/1