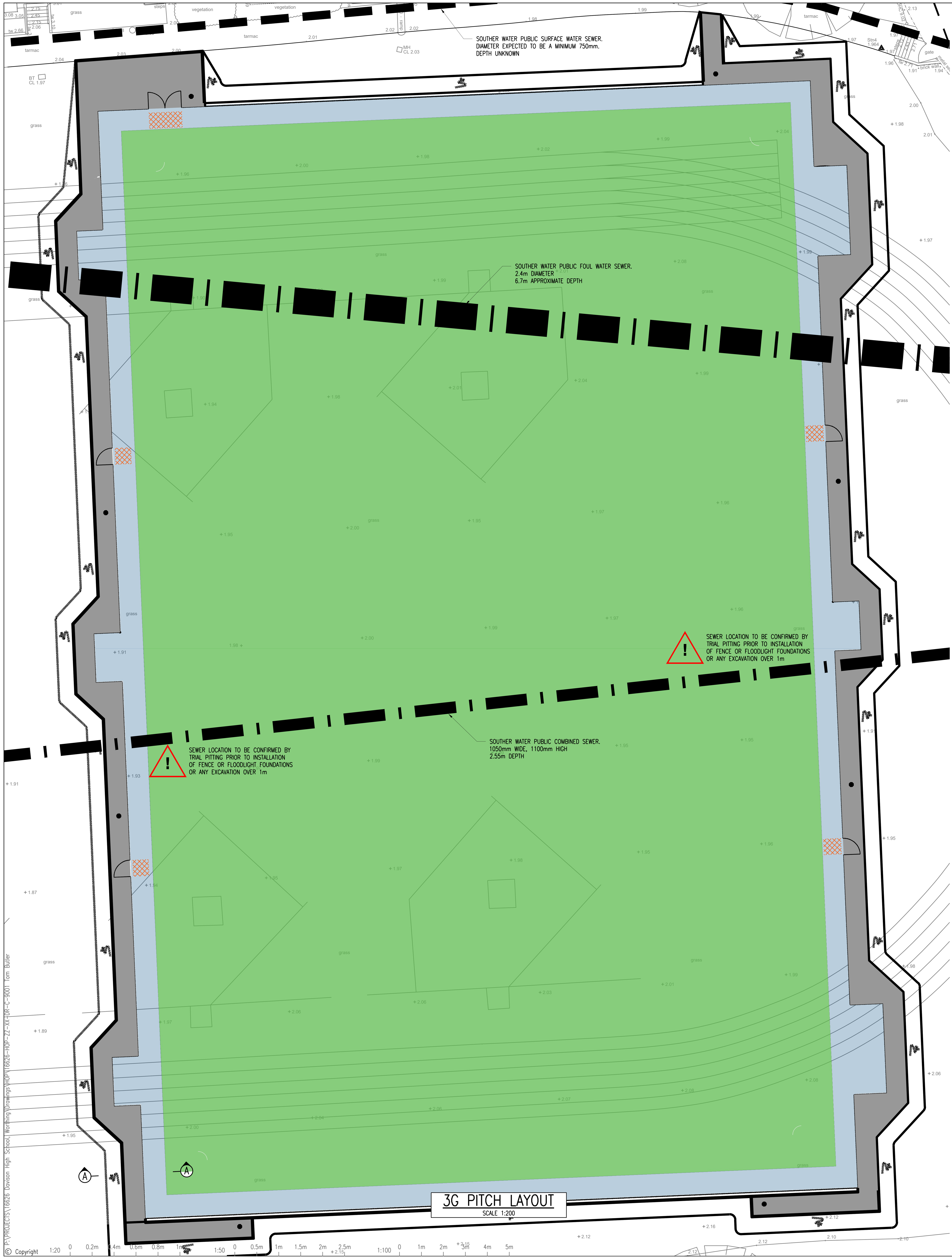

3G PITCH LAYOUT

SCALE 1:200

LEGEND

▬ ▬ ▬	EXISTING SURFACE WATER DRAIN
▬ I ▬ I	EXISTING FOUL/COMBINED WATER DRAIN
(green)	PERMEABLE MUGA SURFACING
(grey)	PERMEABLE ASPHALT SURFACING (NATURAL COLOURED)
(blue)	PERMEABLE ASPHALT SURFACING (BLUE COLOURED)

Project/Task No. 16626/02 Scale: 1:200 ORIGINAL DRAWING SIZE A1

1. GENERAL

(i) This drawing is not to be scaled, work to figured dimensions only, confirmed on site.

(ii) This drawing is to be read in conjunction with all relevant architectural drawings, detailed specifications where applicable and all associated drawings in this series.

(iii) Any discrepancy on this drawing is to be reported immediately to the partnership for clarification.

(iv) The contractor is responsible for all temporary works and for the stability of the works in progress.

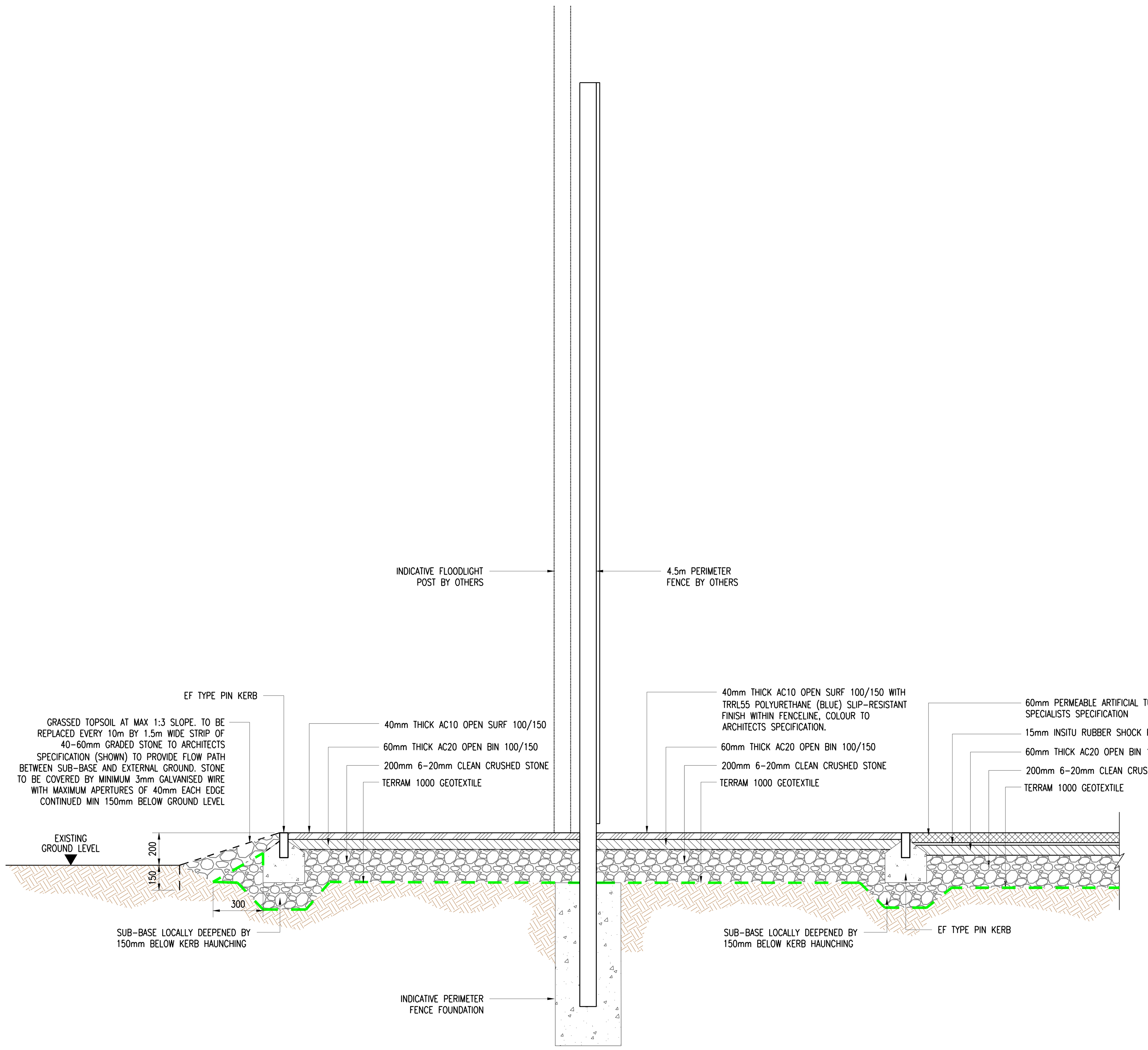

SECTION AA – 3G PITCH SURFACING

SCALE 1:20

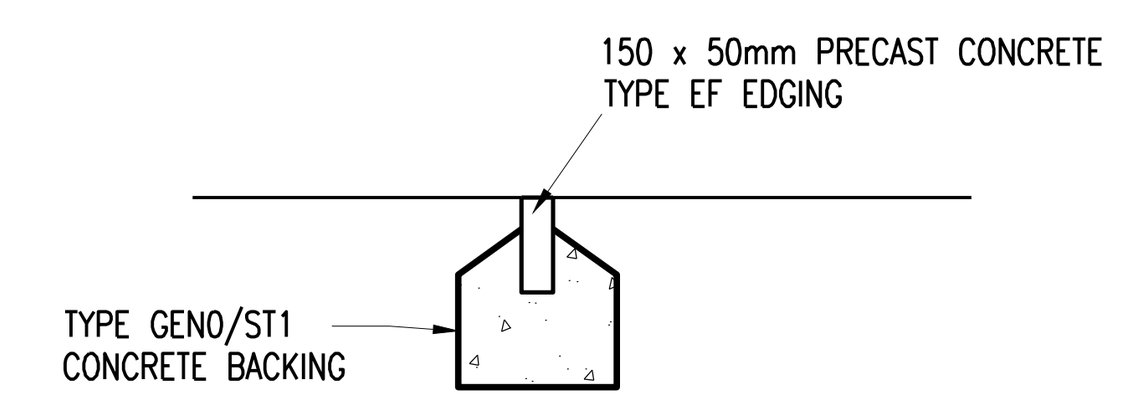

TYPE EF EDGING DETAIL

(1:20)

1:20: 0 0.2m 0.4m 0.6m 0.8m 0.1m

1:200: 0 2m 4m 6m 8m 10m

Description	By	Aprvd.	Date	Rev.
PATH WIDTHS BY ARCHITECT	TRB	AK	23.11.23	P04
REISSUED FOR FRA	TRB	AK	27.10.23	P03
REVISED TO ARCHITECT COMMENTS	TRB	AK	26.10.23	P02
FIRST ISSUE	IAS	TRB	25.10.23	P01

PRELIMINARY DRAWING

NOT FOR CONSTRUCTION

Title: DRAINAGE LAYOUT DETAILS

Project: DAVISON GIRLS SCHOOL 3G PITCH

Client: DAVISON GIRLS SCHOOL

HOP
CONSULTING CIVIL AND STRUCTURAL ENGINEERS
HOP House, 41 Church Road
Hove, East Sussex BN3 2BE
www.hop.uk.com
ask@hop.uk.com
+44 (0)1273 223900

Drawing No. 16626-HOP-ZZ-XX-DR-C-9001 Status S2 Rev. P04

© Copyright

1:20 0 0.2m 0.4m 0.6m 0.8m 1m 1:50 0 0.5m 1m 1.5m 2m 2.5m 1:100 0 1m 2m 3m 4m 5m

P:\PROJECTS\16626 Davison High School, Worthing\Drawings\HOP\16626-HOP-ZZ-XX-DR-C-9001 Tom Butler