Technical Specification

Control Point	Head (m)	Flow (l/s)
Primary Design	1.200	8.000
Flush-Flo™	0.356	7.976
Kick-Flo®	0.765	6.480
Mean Flow		6.939

Hydro-Brake® Optimum Flow Control including:

- 3 mm grade 304L stainless steel
- Integral stainless steel pivoting by-pass door allowing clear line of sight through to outlet, c/w stainless steel operating rope
- Beed blasted finish to maximise corrosion resistance
- Stainless steel fixings
- Rubber gasket to seal outlet
- Indicative Weight: 175 kg

BBA APPROVAL INSPECTION TESTING CERTIFICATION CERTIFICATE 08/4596

WRc Approved PT/329/0412

hydro-int.com/patents

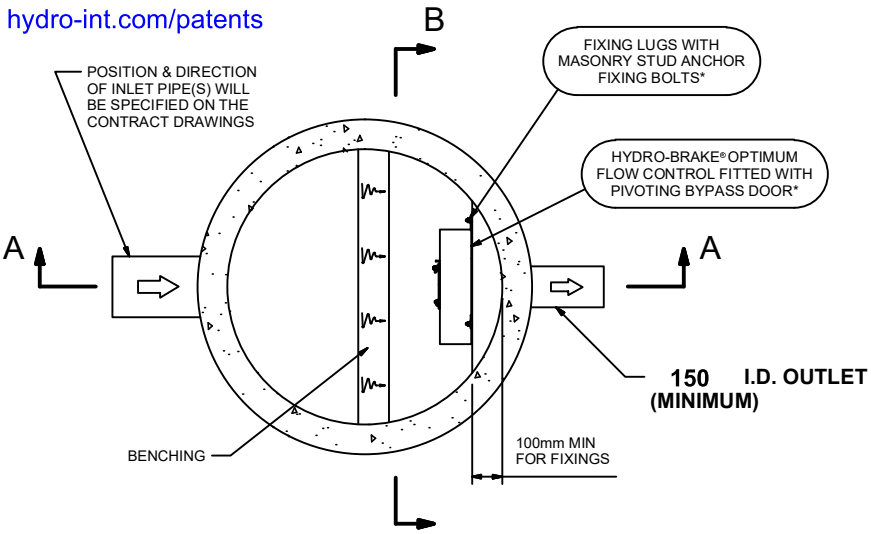

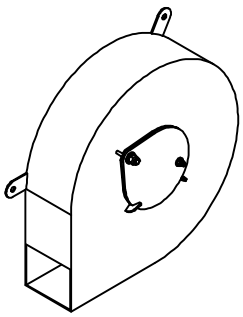

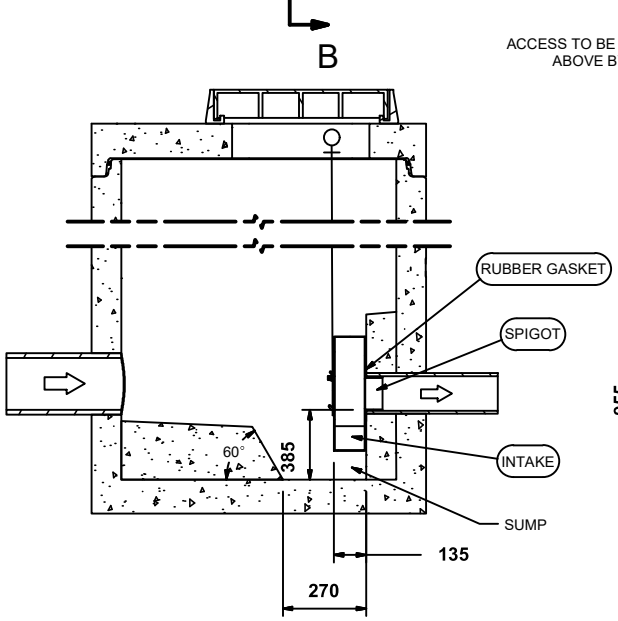

SECTION A-A

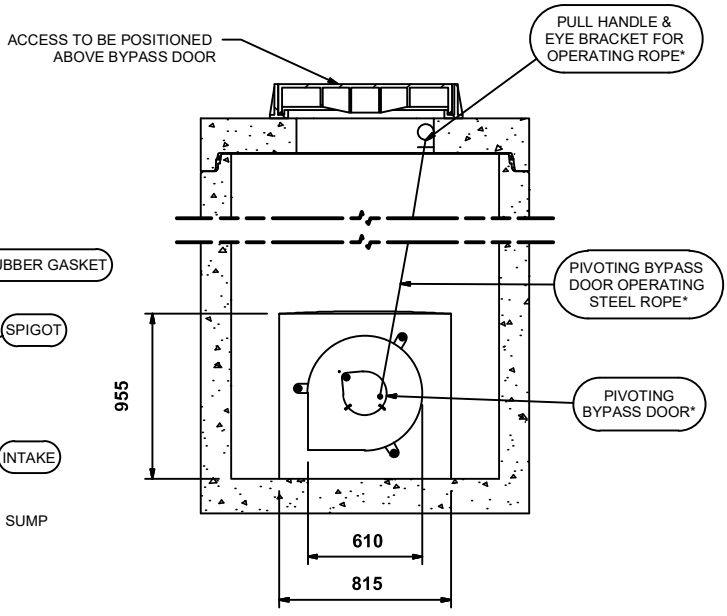

SECTION B-B

IMPORTANT: ⬭ LIMIT OF HYDRO INTERNATIONAL SUPPLY
THE DEVICE WILL BE HANDED TO SUIT SITE CONDITIONS
FOR SITE SPECIFIC DETAILS AND MINIMUM CHAMBER SIZE REFER TO HYDRO INTERNATIONAL
ALL CIVIL AND INSTALLATION WORK BY OTHERS
* WHERE SUPPLIED
HYDRO-BRAKE® FLOW CONTROL & HYDRO-BRAKE® OPTIMUM FLOW CONTROL ARE REGISTERED TRADEMARKS FOR FLOW CONTROLS DESIGNED AND MANUFACTURED EXCLUSIVELY BY HYDRO INTERNATIONAL

THIS DESIGN LAYOUT IS FOR ILLUSTRATIVE PURPOSES ONLY. NOT TO SCALE.

DESIGN ADVICE

The head/flow characteristics of this SHE-0129-8000-1200-8000 Hydro-Brake® Optimum Flow Control are unique. Dynamic hydraulic modelling evaluates the full head/flow characteristic curve.
The use of any other flow control will invalidate any design based on this data and could constitute a flood risk.

Hydro International®

DATE	6/14/2022 11:47 AM
SITE	20_21_3422 The Mannings, Shoreham on Sea
DESIGNER	
REF	HQT-110488 Hydrobrake 1

SHE-0129-8000-1200-8000
Hydro-Brake® Optimum

© 2022 Hydro International Ltd, Shearwater House, Clevedon Hall Estate, Victoria Road, Clevedon, BS21 7RD. Tel; 01275 878371 Fax; 01275 874979 Web; www.hydro-int.com Email; enquiries@hydro-int.com

Technical Specification

Control Point	Head (m)	Flow (l/s)
Primary Design	1.200	8.000
Flush-Flo	0.356	7.976
Kick-Flo®	0.765	6.480
Mean Flow		6.939

BBA APPROVAL INSPECTION TESTING CERTIFICATION
CERTIFICATE No 08/4596

WRc APPROVED
PT/329/0412

hydro-int.com/patents

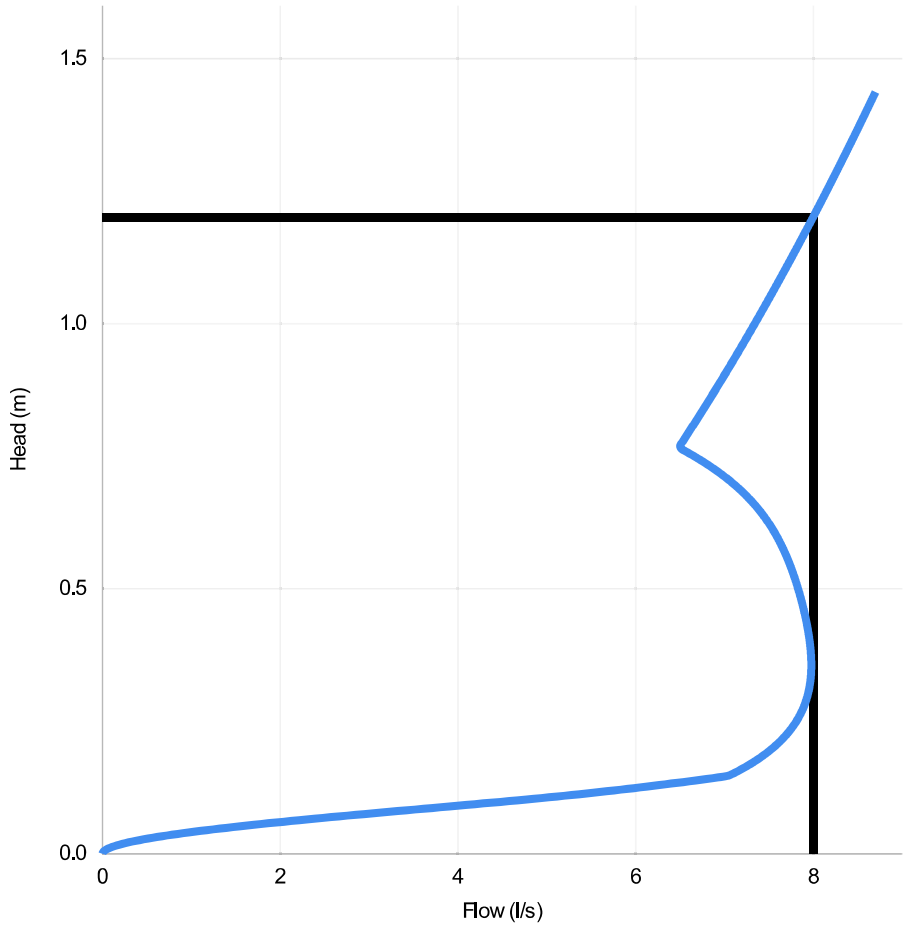

Head (m)	Flow (l/s)
0.000	0.000
0.041	1.020
0.083	3.466
0.124	5.994
0.166	7.253
0.207	7.592
0.248	7.802
0.290	7.918
0.331	7.969
0.372	7.973
0.414	7.946
0.455	7.898
0.497	7.834
0.538	7.752
0.579	7.648
0.621	7.510
0.662	7.321
0.703	7.061
0.745	6.710
0.786	6.561
0.828	6.720
0.869	6.874
0.910	7.025
0.952	7.172
0.993	7.316
1.034	7.457
1.076	7.594
1.117	7.730
1.159	7.862
1.200	7.993

DESIGN ADVICE

The head/flow characteristics of this SHE-0129-8000-1200-8000 Hydro-Brake Optimum® Flow Control are unique. Dynamic hydraulic modelling evaluates the full head/flow characteristic curve.

! **The use of any other flow control will invalidate any design based on this data and could constitute a flood risk.**

Hydro International®

DATE	14/06/2022 11:47
Site	20_21_3422 The Mannings, Shoreham on Sea
DESIGNER	
Ref	HQT-110488 Hydrobrake 1

SHE-0129-8000-1200-8000

Hydro-Brake Optimum®

© 2018 Hydro International, Shearwater House, Clevedon Hall Estate, Victoria Road, Clevedon, BS21 7RD. Tel 01275 878371 Fax 01275 874979 Web www.hydro-int.com Email designtools@hydro-int.com

Technical Specification

Control Point	Head (m)	Flow (l/s)
Primary Design	0.600	17.800
Flush-Flo™	0.286	17.772
Kick-Flo®	0.483	16.056
Mean Flow		14.004

Hydro-Brake® Optimum Flow Control including:

- 3 mm grade 304L stainless steel
- Integral stainless steel pivoting by-pass door allowing clear line of sight through to outlet, c/w stainless steel operating rope
- Beed blasted finish to maximise corrosion resistance
- Stainless steel fixings
- Rubber gasket to seal outlet
- Indicative Weight: 139 kg

BBA APPROVAL INSPECTION TESTING CERTIFICATION CERTIFICATE 08/4596

WRc Approved PT/329/0412

hydro-int.com/patents

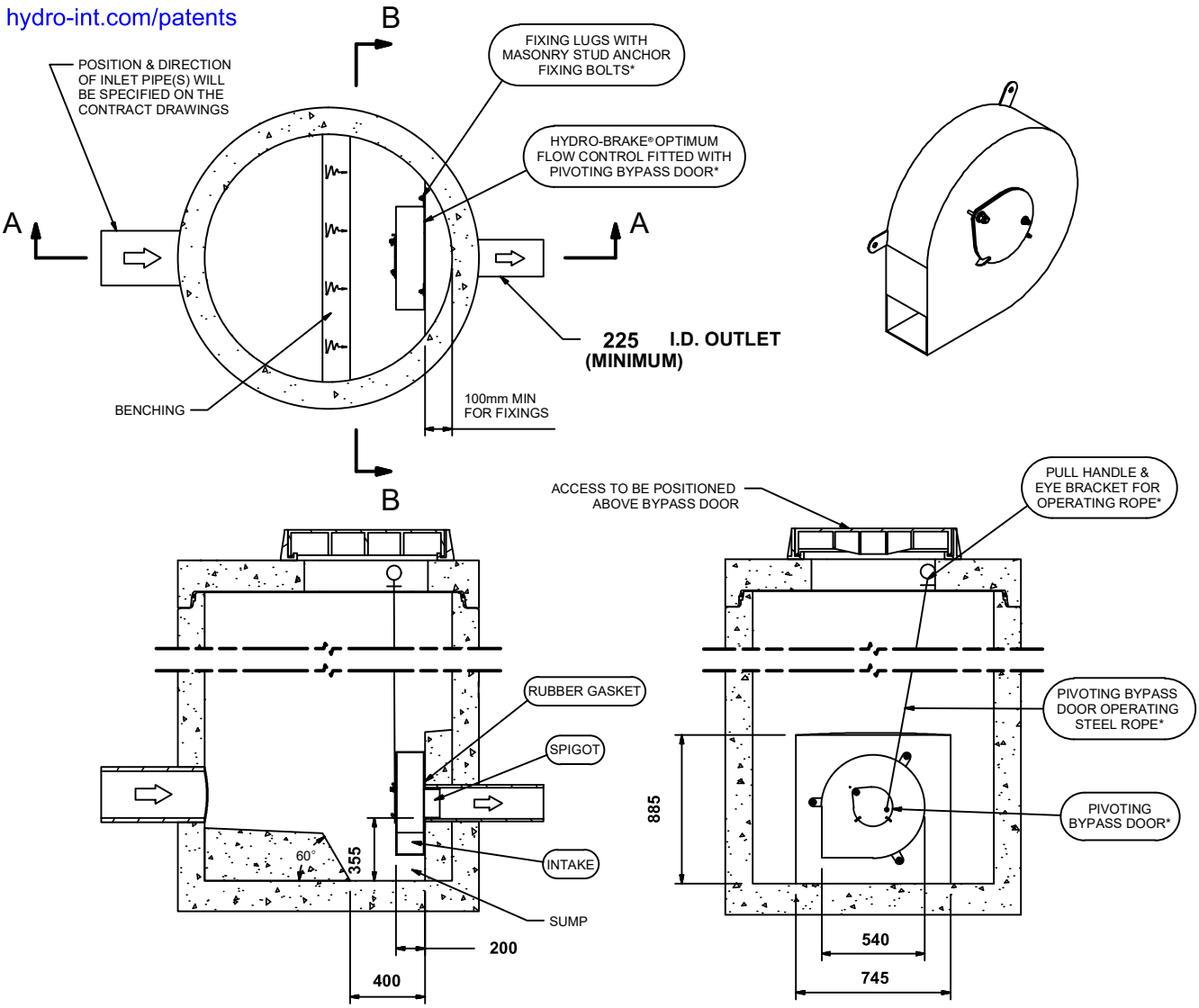

SECTION A-A

SECTION B-B

IMPORTANT:
LIMIT OF HYDRO INTERNATIONAL SUPPLY
THE DEVICE WILL BE HANDED TO SUIT SITE CONDITIONS
FOR SITE SPECIFIC DETAILS AND MINIMUM CHAMBER SIZE REFER TO HYDRO INTERNATIONAL
ALL CIVIL AND INSTALLATION WORK BY OTHERS
* WHERE SUPPLIED
HYDRO-BRAKE® FLOW CONTROL & HYDRO-BRAKE® OPTIMUM FLOW CONTROL ARE REGISTERED TRADEMARKS FOR FLOW CONTROLS DESIGNED AND MANUFACTURED EXCLUSIVELY BY HYDRO INTERNATIONAL

THIS DESIGN LAYOUT IS FOR ILLUSTRATIVE PURPOSES ONLY. NOT TO SCALE.

DESIGN ADVICE

The head/flow characteristics of this SHE-0193-1780-0600-1780 Hydro-Brake® Optimum Flow Control are unique. Dynamic hydraulic modelling evaluates the full head/flow characteristic curve.
The use of any other flow control will invalidate any design based on this data and could constitute a flood risk.

Hydro International®

DATE	6/14/2022 12:18 PM
SITE	20_21_3422 The Mannings, Shoreham on Sea
DESIGNER	
REF	HQT-110488 Hydrobrake 2

SHE-0193-1780-0600-1780
Hydro-Brake® Optimum

© 2022 Hydro International Ltd, Shearwater House, Clevedon Hall Estate, Victoria Road, Clevedon, BS21 7RD. Tel; 01275 878371 Fax; 01275 874979 Web; www.hydro-int.com Email; enquiries@hydro-int.com

Technical Specification

Control Point	Head (m)	Flow (l/s)
Primary Design	0.600	17.800
Flush-Flo	0.286	17.772
Kick-Flo®	0.483	16.056
Mean Flow		14.004

BBA APPROVAL INSPECTION TESTING CERTIFICATION
CERTIFICATE No 08/4596

WRc APPROVED
PT/329/0412

hydro-int.com/patents

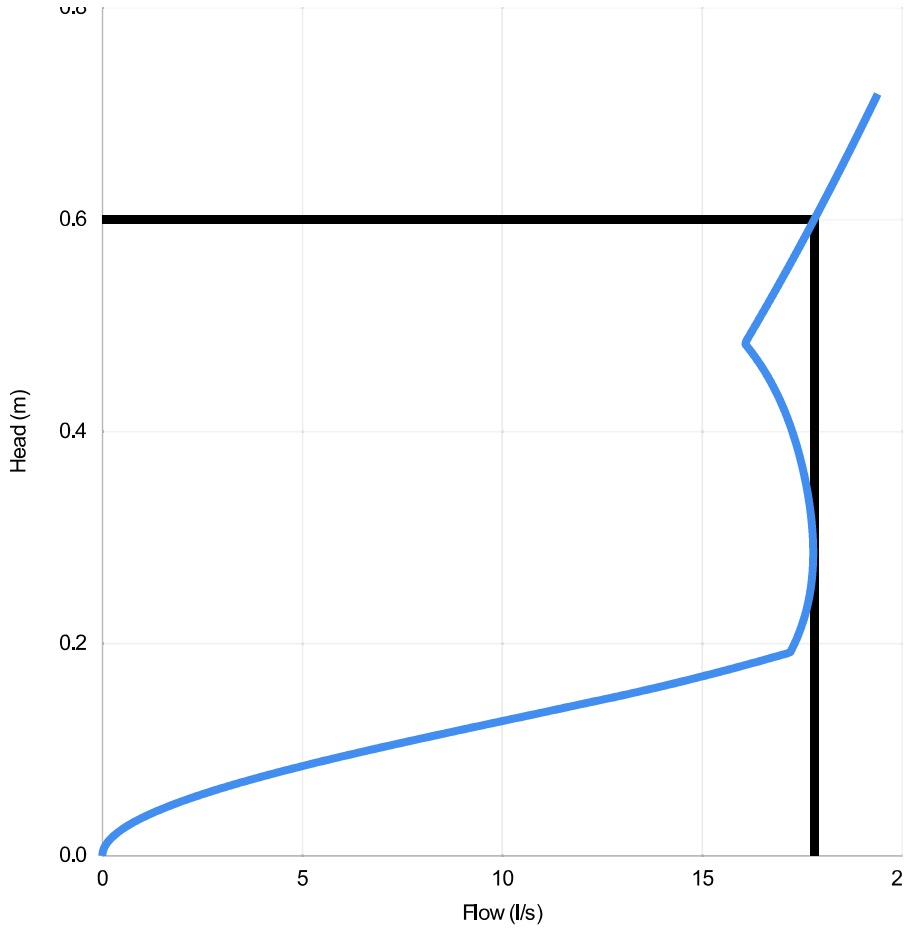

Head (m)	Flow (l/s)
0.000	0.000
0.021	0.341
0.041	1.314
0.062	2.835
0.083	4.806
0.103	7.116
0.124	9.633
0.145	12.195
0.166	14.606
0.186	16.677
0.207	17.382
0.228	17.571
0.248	17.693
0.269	17.757
0.290	17.771
0.310	17.744
0.331	17.681
0.352	17.587
0.372	17.464
0.393	17.310
0.414	17.119
0.434	16.883
0.455	16.587
0.476	16.215
0.497	16.267
0.517	16.585
0.538	16.896
0.559	17.200
0.579	17.499
0.600	17.793

DESIGN ADVICE

The head/flow characteristics of this SHE-0193-1780-0600-1780 Hydro-Brake Optimum® Flow Control are unique. Dynamic hydraulic modelling evaluates the full head/flow characteristic curve.

! **The use of any other flow control will invalidate any design based on this data and could constitute a flood risk.**

Hydro International®

DATE	14/06/2022 12:18
Site	20_21_3422 The Mannings, Shoreham on Sea
DESIGNER	
Ref	HQT-110488 Hydrobrake 2

SHE-0193-1780-0600-1780

Hydro-Brake Optimum®

© 2018 Hydro International, Shearwater House, Clevedon Hall Estate, Victoria Road, Clevedon, BS21 7RD. Tel 01275 878371 Fax 01275 874979 Web www.hydro-int.com Email designtools@hydro-int.com