PROPOSED

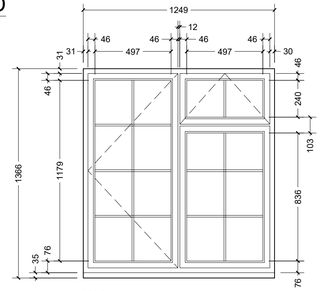

W4:
White aluminium sill
White aluminium outer frame
Green aluminium inner frame
Double glazed

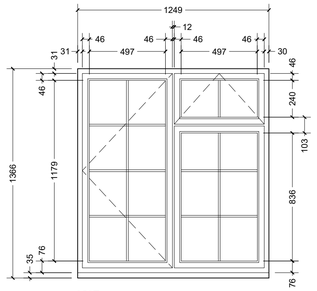

W5:
White aluminium sill
White aluminium outer frame
Green aluminium inner frame
Double glazed

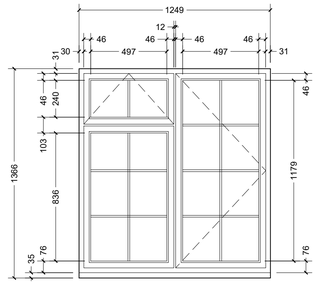

W6:
White aluminium sill
White aluminium outer frame
Green aluminium inner frame
Double glazed

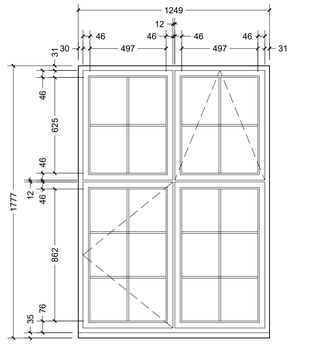

W1:
White aluminium sill
White aluminium outer frame
Green aluminium inner frame
Double glazed

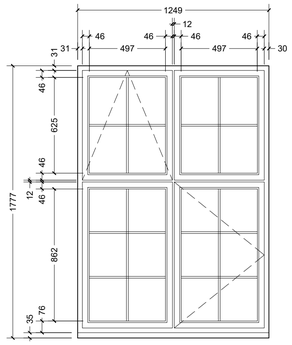

W2:
White aluminium sill
White aluminium outer frame
Green aluminium inner frame
Double glazed

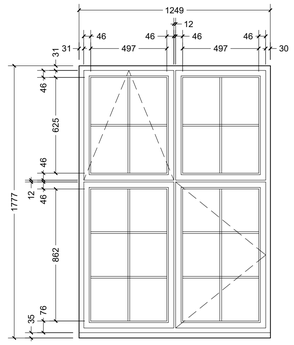

W3:
White aluminium sill
White aluminium outer frame
Green aluminium inner frame
Double glazed

EXISTING

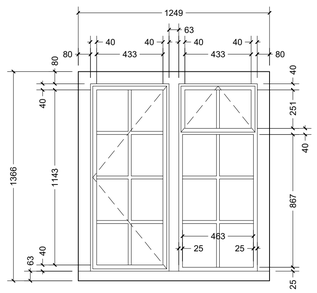

W4:
White timber sill
White timber outer frame
Green steel inner frame
Single glazed

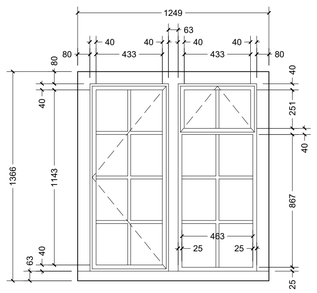

W5:
White timber sill
White timber outer frame
Green steel inner frame
Single glazed

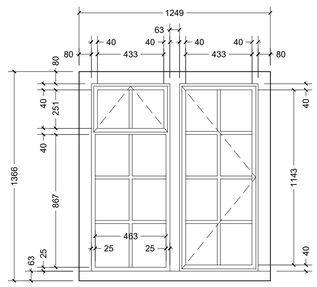

W6:
White timber sill
White timber outer frame
Green steel inner frame
Single glazed

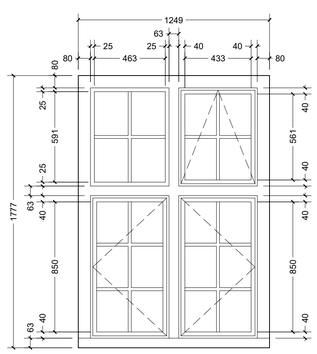

W1:
White timber sill
White timber outer frame
Green steel inner frame
Single glazed

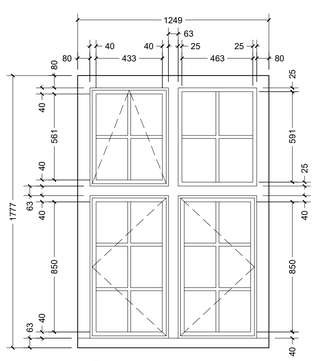

W2:
White timber sill
White timber outer frame
Green steel inner frame
Single glazed

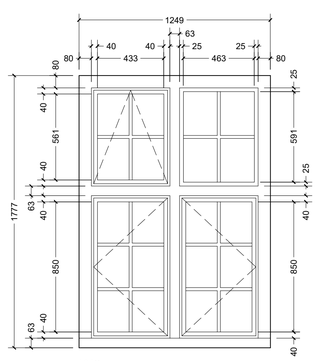

W3:
White timber sill
White timber outer frame
Green steel inner frame
Single glazed

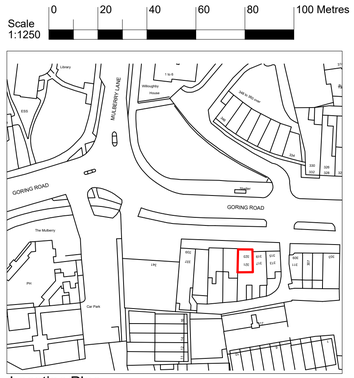

Location Plan
Scale 1:1250

N



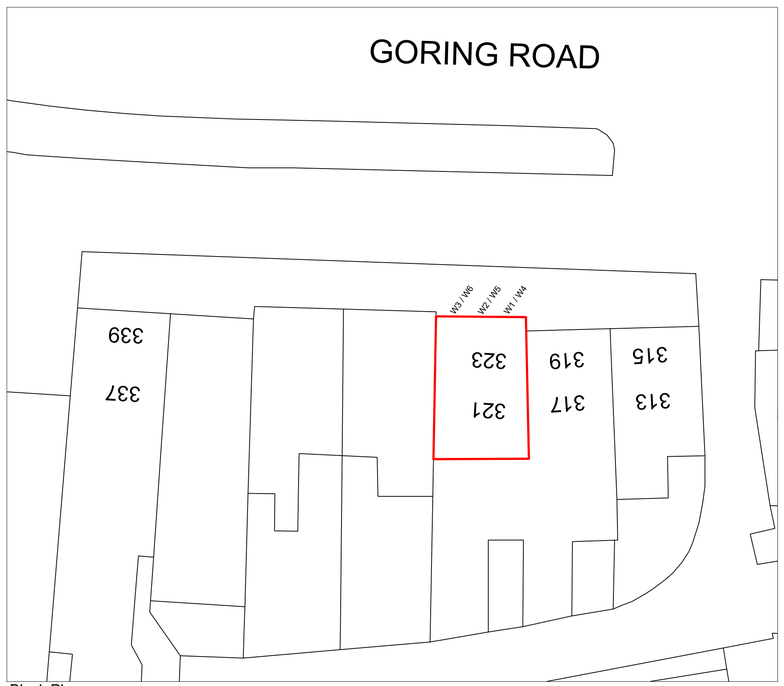

Block Plan
Scale 1:200

Rev:	Description:	Date:
-	-	-

HORIZON DESIGN
ARCHITECTURAL TECHNOLOGY
Horizon Design Limited
4 High View
Worthing BN13 3DQ
01903 205868
info@horizon-design.co.uk
www.horizon-design.co.uk

Client:
Mr Yale

Project:
Replacement Glazing:
323 Goring Road
Worthing
West Sussex
BN12 4NX

Drawing title:
Glazing Details, Photo, Location & Block Plan.

Scale:
1:20 / 1:1250 / 1:200 @ A1

Date: 07.06.23
Drawn: KWF

Drawing number: 3138-01
Revision: -