Pos. 001, Quantity: 2
Job: PENNY (REV1)
System: SMA Alitherm 300 Standard Stays Square
Exterior View

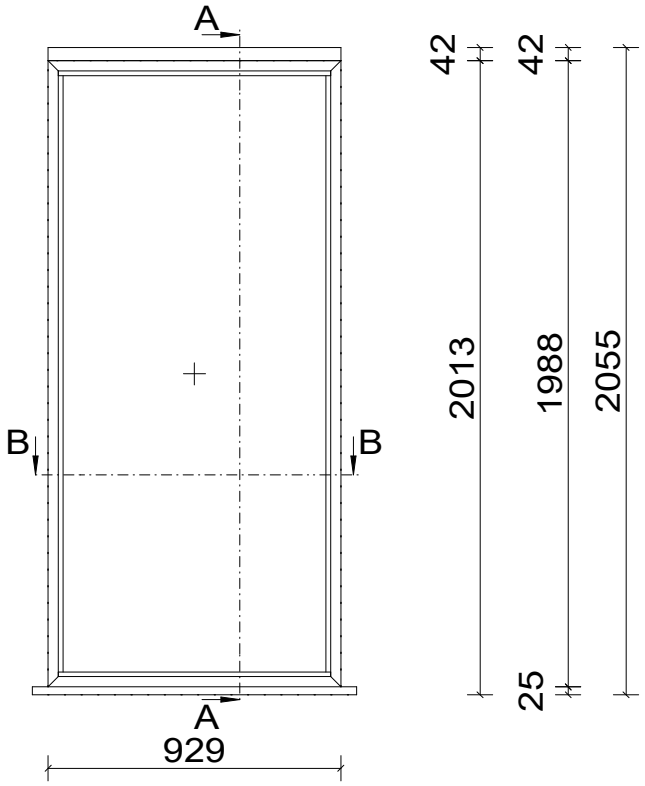

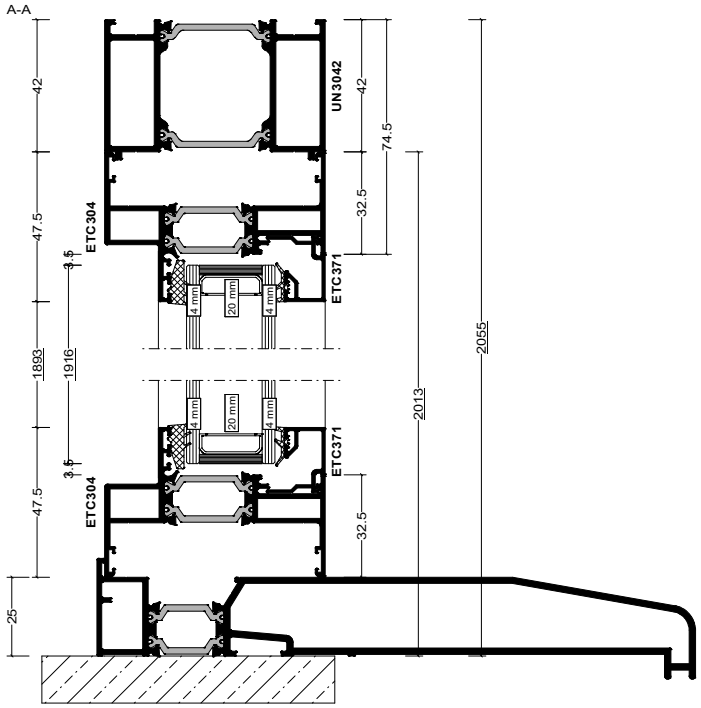

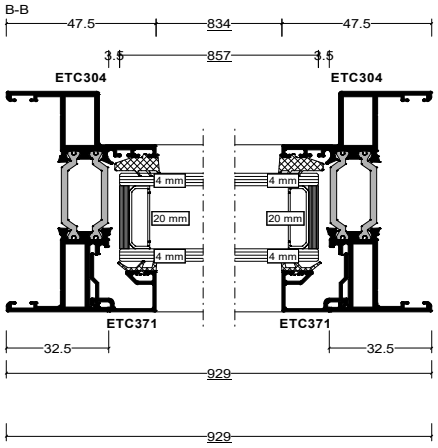

Pos. 002, Quantity: 1
Job: PENNY (REV1)
System: SMA Visofold 1000 Open out Frame All Around Square Standard
Exterior View

