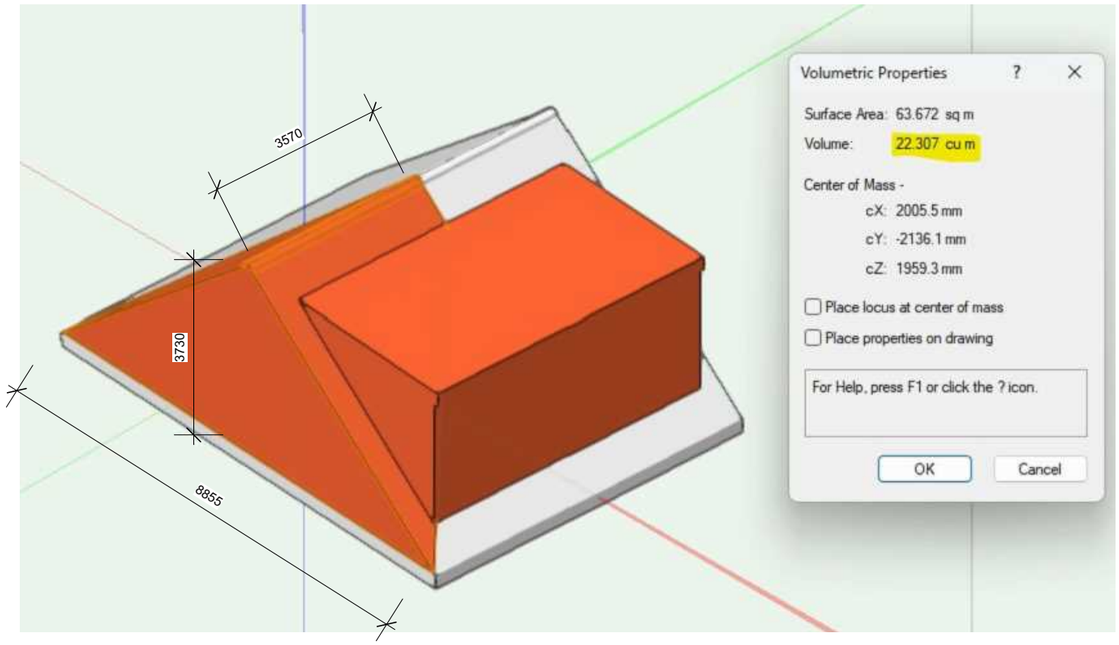

Hip to gable extension
22.307m3

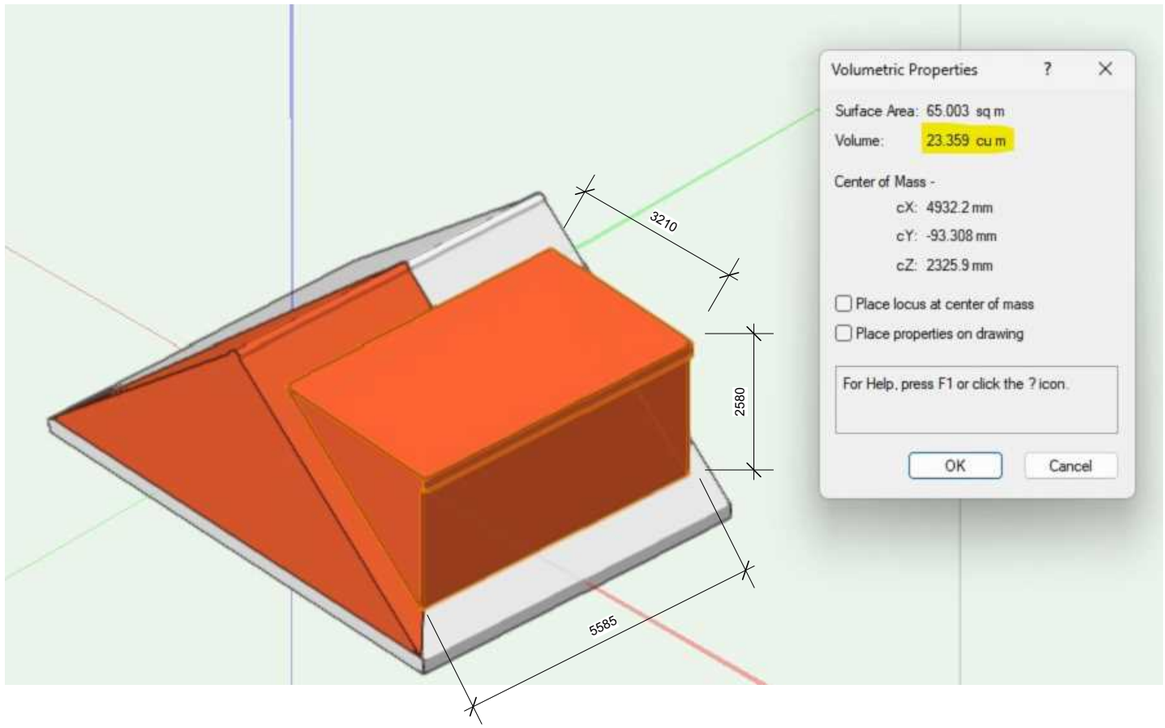

Dormer extension
23.359m3

Total
45.66m3

23 Vine Street, Brighton BN1 4AG
e: studio@sticklandwright.co.uk
t: 01273 964051
Company registered in England No. 11222477

Disclaimer:
This drawing is the copyright of Stickland Wright Ltd. and may not be reproduced or used except by written permission. Figured dimensions to have precedence over scaling. Check all site dimensions prior to fabrication. Refer any discrepancies found to Stickland Wright.

Revisions:

			Checked
A	16/12/2024	For planning	

Dwg No.	**24054-P-126 A**
Drawing Title	Proposed extensions
Address	46 Parkside Shoreham
Client	Peter and Penny
Scale	nts @A3
Stage	Planning
Drawn by	ah
Checked by	ns

STICKLAND WRIGHT
architecture + interiors
www.sticklandwright.co.uk