LEGEND

D - Minimum 60mm drip

WR - 50mm woodcored rolls

C - Chute outlets through parapets formed by extending gutter boarding.

——► Fall in gutters - minimum 1 in 80 (12.5mm in 1m); 18mm plywood decking with geotextile underlay beneath lead. Code 6 milled sheet lead generally unless otherwise noted - maximum 2500mm between drips.

NAE - Nicholson Airtrak Eaves ventilators (equivalent 25mm continuous ventilation)

W - Welted Code 5 lead weatherings over underlay to parapets and cornice welts at maximum 1500mm centres. 50mm wide copper or stainless steel clips (2 no. in each welt) and continuous clippings to welted outer edges to be provided

HH - Cast iron hopper head and downpipe

Ridge - to incorporate wood rolls and Code 5 milled sheet lead lapped 200mm with laps at maximum 1.5m intervals. Widths of ridge weatherings to be sufficient to enable lead to be dressed minimum 150mm onto the surface of the slating.

Ridge weatherings to be clipped with 50mm wide 0.7 copper or 0.46 stainless steel clips at each lap and thereafter at maximum 450mm centres. Clips to be twice nailed to the top of each wood roll and provided with extra lower fixings drilled through slate weatherings and into the slate battens.

Flat roof weatherings (Code 5 milled sheet lead) to be secured in each bay adjacent ridge with two rows of close copper nails at 75mm centres (staggered): upstands to be formed at the wood rolls.

Gutter linings to be close copper nailed to under cloaks at each drip position (drips to be rebated for this).

Gutter upstands to inside facings of parapets to be weathered with Code 4 milled sheet lead flashings lapped from 150mm and in maximum 1.5m pieces.

All ridge weatherings, parapet and cornice weatherings, flashings etc. to be liberally coated with patination oil immediately following fixing including to the undersides of the leading edges.

Works to be undertaken in accordance with the recommendations of the lead sheet association and in accordance with British Standard 6915:2001:Design & Construction of Fully Supported Lead Roof and Wall Coverings - Code of Practice. Lead to comply with British Standard EN12588:1999.

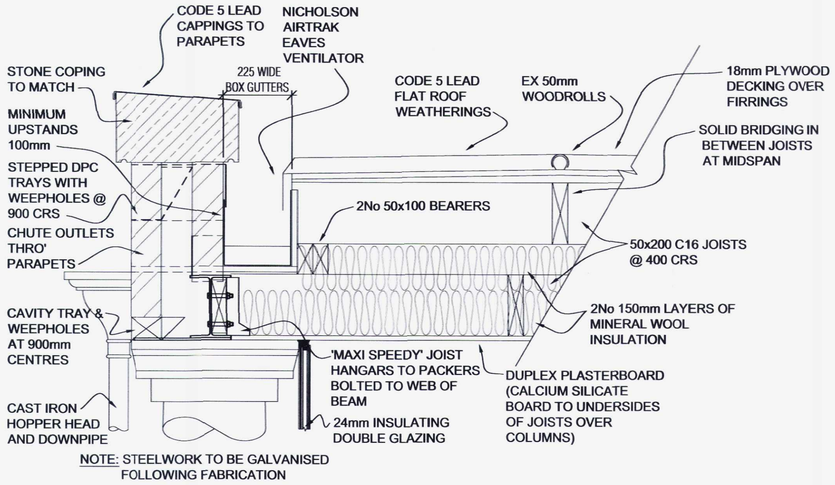

PARAPET DETAIL (Scale 1:10)

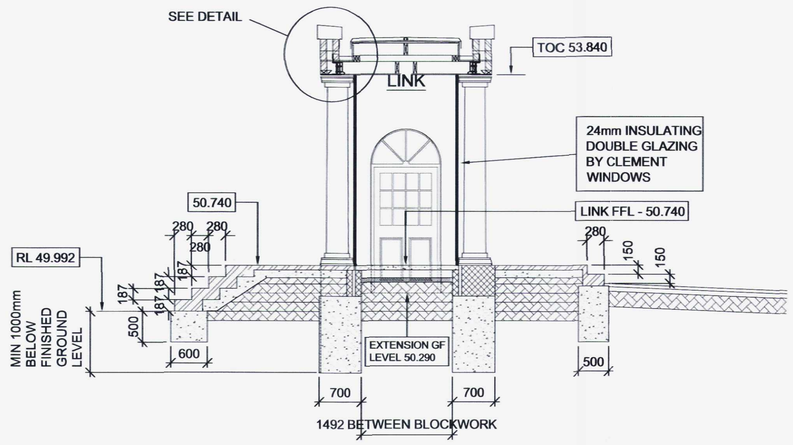

SECTION F-F (SCALE 1:50)

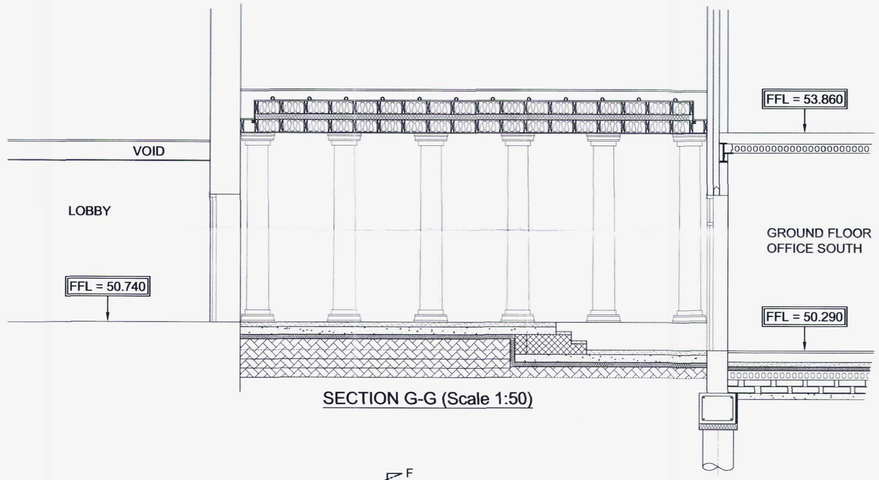

SECTION G-G (Scale 1:50)

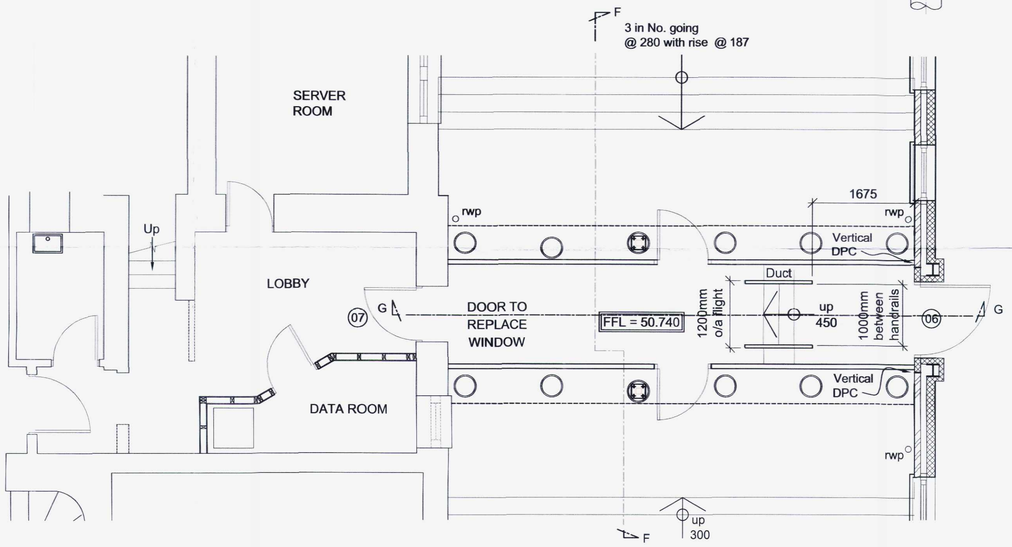

GROUND FLOOR PLAN (Scale 1:50)

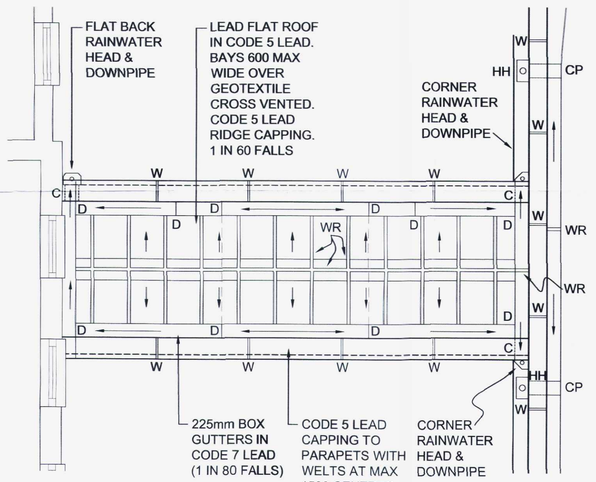

ROOF PLAN (Scale 1:50)

All dimensions and levels must be checked on site prior to commencement. Do not scale from this drawing. Any discrepancies must be reported to mlsurveyors before work commences. Copyright of this drawing is retained by mlsurveyors and it must not be reproduced without the written approval of mlsurveyors.

WORTHING BOROUGH COUNCIL
WB/ 10 / 0782/FULL/MMA1
AGREED DECISION AMENDMENT
DATE 19 / 05 / 2011
REVISED PLAN

BOROUGH OF WORTHING
DEPOSITED
TP. REF. No.
WB/ 10 / 0782/FULL/MMA1

T.P. OFFICE COPY

Rev	Date	Description	Chkd
D	11.04.11	Redesign of parapet gutters; omission of RWP's	SH
D	01.11.10	Redesign of Link (Reduced width)	SH
C	24.11.09	Vertical DPC's; parapet tray; galvanising of steelwork	SH
B	10.03.09	Foundation alterations	SH
A	05.02.09	NE Catchpit alteration; Link Steps width; further Parapet details; Dimensions	SH

mlsurveyors
Chartered Surveyors
32a The Broadway
Haywards Heath
West Sussex
RH16 3AL
Tel: 01444-458444
Fax: 01444-458454
hheath@mlsurveyors.co.uk
www.mlsurveyors.co.uk

Client
BOND INT'L SOFTWARE PLC

Project
COURTLANDS
PARKLANDS AVENEUE
GORING-BY-SEA, WORTHING
WEST SUSSEX

Title
AS PROPOSED
LINK DETAILS

Scale: As Noted
Drawn By:
Date: 12.08
Drawing No.: 03-12-06-24
Rev: E