

Bedroom 1 (rear) 1230 X 1870mm
Upvc framed

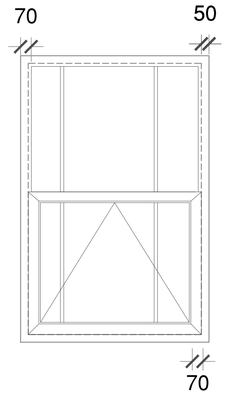

Bedroom 2 (rear) 1230 X 1870mm
Upvc framed

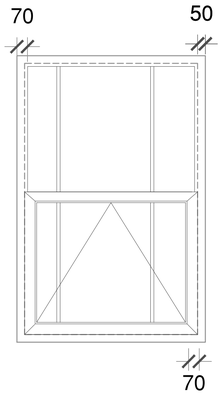

Kitchen (rear) 1230 X 1870mm
Upvc framed

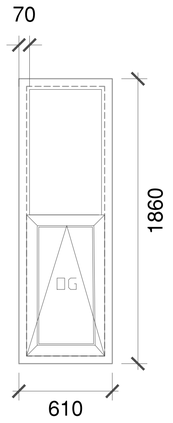

Bathroom (rear) 610 X 1860mm
Upvc framed

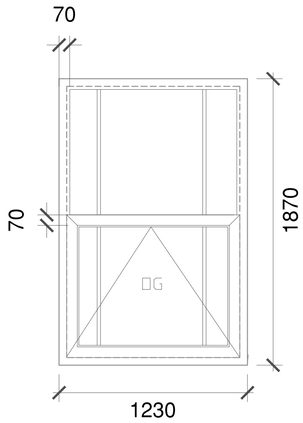

WC (front) 1230 X 1870mm
Upvc framed



Location Plan
Scale: 1:1250



Block Plan
Scale: 1:500
0 10 20 30 40 50m

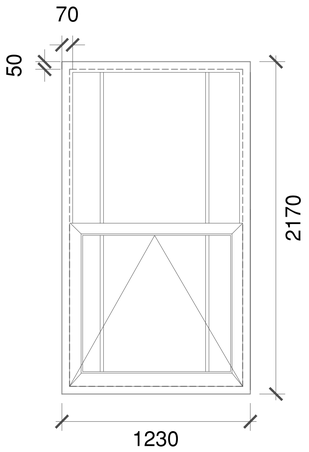

Lounge(rear) 2170 X 1230mm
Upvc framed

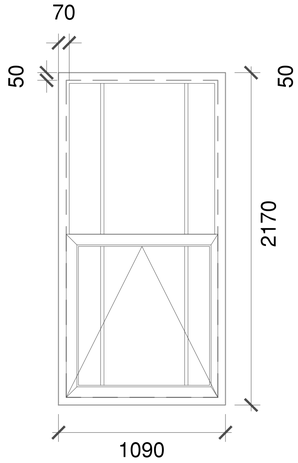

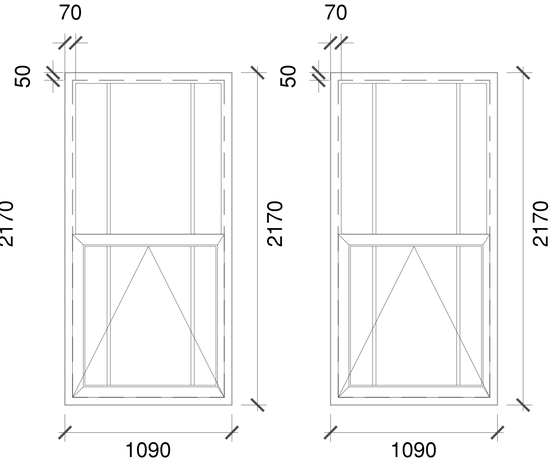

Lounge(side) 2170 X 1230mm
Aluminum framed

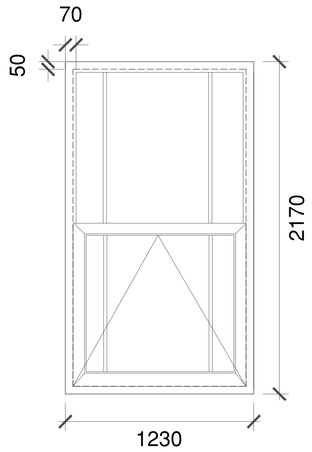

Lounge(rear) 2170 X 1230mm
Upvc framed

Proposed
Scale: 1:20
0 1 2

Beading to be externally applied
Beading to be moulded profiled

Framed windows
broken out and removed off site by contractor.Install new UPVC double glazed windows as indicated all in white finish,
Contractor to be FENSA registered.



Lounge
WC



Lounge



Bedroom 1
Bedroom 2
Bathroom
Kitchen
Lounge

Revision	Date	Details	Initials
E	10.02.2018	Planning Amendments	DLS
D	7.02.2018	Planning Amendments	DLS
C	9.02.2018	Planning Amendments	DLS
B	29.01.2018	Planning Amendments	DLS
A	11.12.2017	Client Amendments	DLS

Do not scale from drawings, apart for the use of planning. Check all levels and dimensions before carrying out work. These drawings and designs are the property of Shear Architectural Design Ltd. and must not be copied, retained or used without written approval. ©Copyright

SHEAR DESIGN
CREATE INSPIRE ENHANCE
2 Saffron Close
Shoreham By Sea
West Sussex
BN43 6JF
07881 656512
darrylshear@hotmail.com

PROJECT
Flat 12 60 Victoria Court, West Sussex BN43 5WS

Replacement windows and doors to first floor flat

DRAWING TITLE

DATE:	02.12.2017
SCALE:	various
DRAWN	
CHECKED	
SHEET	OF

NORTH

PROJECT NUMBER	DRAWING NUMBER	REVISION
17/62	SK2	E