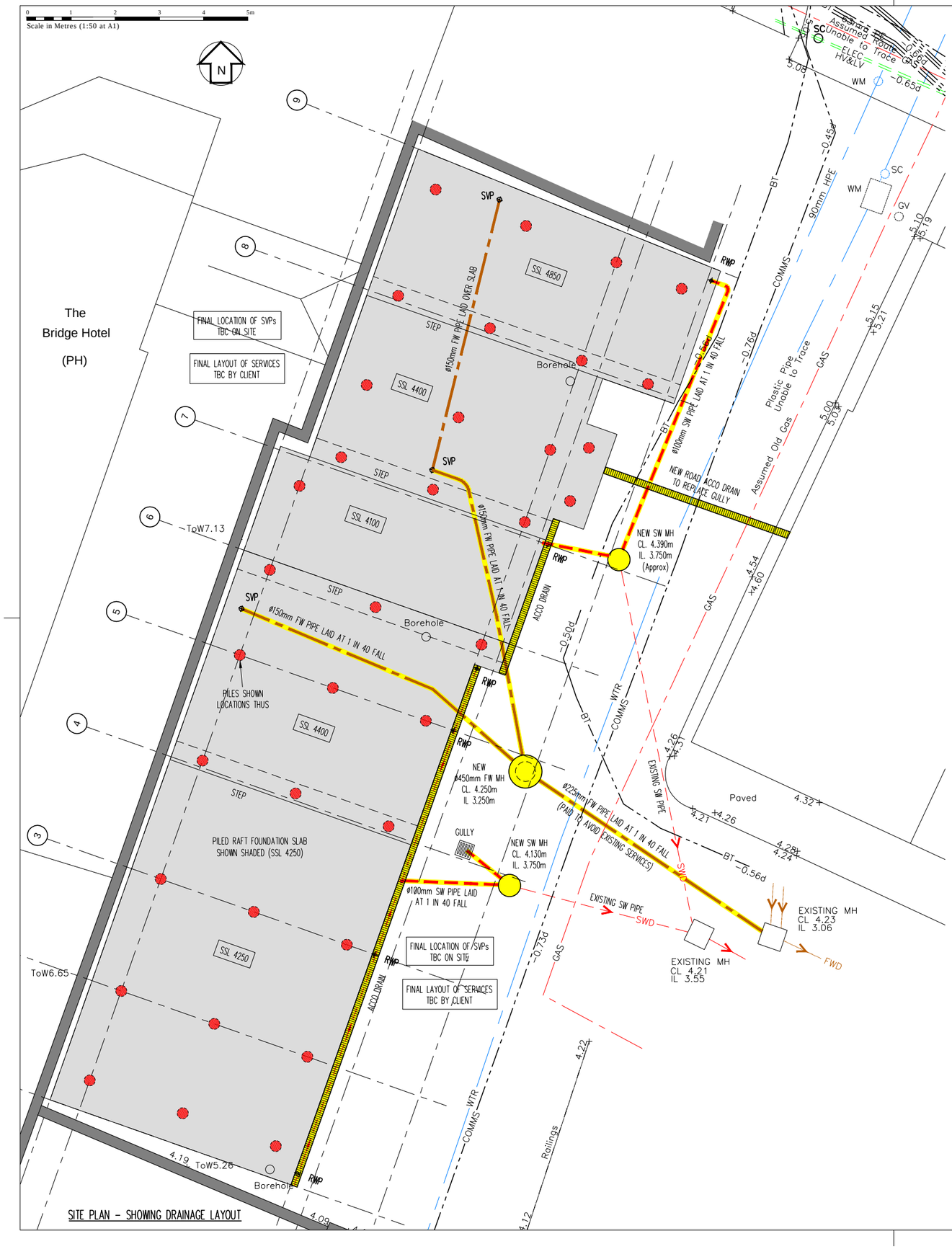

SITE PLAN – SHOWING DRAINAGE LAYOUT

NOTE:
ALL BACKFILLING AND REINSTATEMENT WITHIN ADOPTABLE ROADS AND STREETS TO BE IN ACCORDANCE WITH THE HIGHWAY AUTHORITY AND HAUC SPECIFICATION.

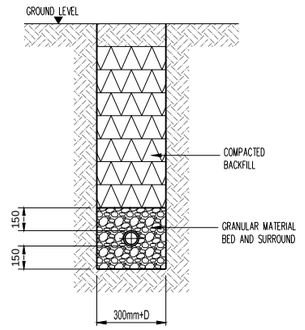

GRANULAR BEDDING DETAIL
(WHERE COVER > 900mm BENEATH TRAFFICKED AREAS AND > 600mm BENEATH NON-TRAFFICKED AREAS/GARDENS)

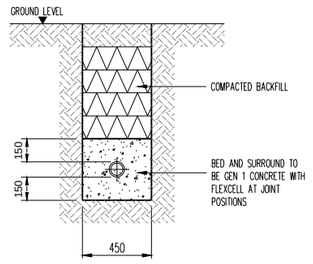

CONCRETE BEDDING DETAIL
(WHERE COVER < 900mm BENEATH TRAFFICKED AREAS AND < 600mm BENEATH NON-TRAFFICKED AREAS/GARDENS)

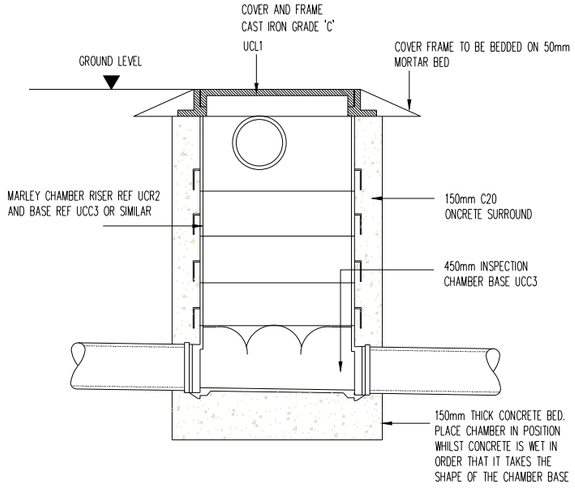

450mm CIRCULAR POLYPROPYLENE INSPECTION CHAMBER

NOTES

In addition to these notes, reference shall be made to the specification of works and the relevant Architect's and Specialist's drawings and specifications.

The Contractor is responsible for verifying all site dimensions before commencing work.

All dimensions are in millimetres unless noted otherwise.

This drawing has been produced electronically and may have been photo reduced or enlarged when printed or copied. Dimensions on this drawing shall not be scaled. Work only to figured dimensions. Any dimensional discrepancies errors or omissions are to be reported to the engineer immediately.

Levels are in metres unless noted otherwise to Ordnance Survey datum.

The Contractor is responsible for the stability of the building whilst the works are in progress.

All drainage shall be constructed and commissioned in accordance with BS EN 295 & BS EN752, Building Regulations Doc. H and any particular requirements of the Building Control Officer.

Drainage pipelines shall be in PVC-u below ground as Marley or similar approved, or vitrified clay. All sewer pipelines to be VC or CONCRETE.

This drawing shall be read in conjunction with all other relevant drainage drawings, architectural drawings and structural drawings.

For manhole details, gully details, bedding etc, refer to detail sheets.

All foul water drain runs shall have a fall of 1:40 or steeper, unless noted otherwise.

All cement used for concrete drainage installations shall be sulphate resistant to class 3 of BRE Digest 363. (Grade ST5)

The use of short radius or 90° bends for changes in direction is not permitted, only long or medium radius 45° bends shall be used. All junctions shall be 45°.

All drains shall have granular bed and surround as class 'S' bedding, unless noted otherwise.

All drainage works shall commence from the upstream end first unless agreed otherwise. Outfall level to be checked by contractor prior to any works commencing and any discrepancy identified to engineer prior to laying and drainage.

Sewers to be laid in accordance with "Sewers for Adoption" 7th edition

REV	DESCRIPTION	DATE	BY
D	FOOTPRINT LOCATION AMENDED	7/4/18	MJB
C	LAYOUT AMENDED	28/3/18	MJB
B	LAYOUT AMENDED	25/3/18	MJB
A	LAYOUT AMENDED	19/3/18	MJB
0	ORIGINAL ISSUE	Mar '18	MJB

MITCHINSON MACKEN
Unit 1, 100 North Road, Brighton, East Sussex, BN1 1YE
T: 01273 609742 M: 07968 188928
W: www.mitchinsonmacken.co.uk E: info@mitchinsonmacken.co.uk

PROJECT
GARAGE STUDIOS
HIGH STREET
SHOREHAM-BY-SEA. BN43 5EN

DRAWING
SITE PLAN
SHOWING DRAINAGE LAYOUT

DRAWING No.	REV	CHECKED
18080 / 100	D	
SCALE: As Shown	DATE: Mar'18	DRAWN: MJB	APPROVED