S38 CARRIAGEWAY WITH FOOTWAY AND VEHICLE CROSSOVER CONSTRUCTION DETAIL

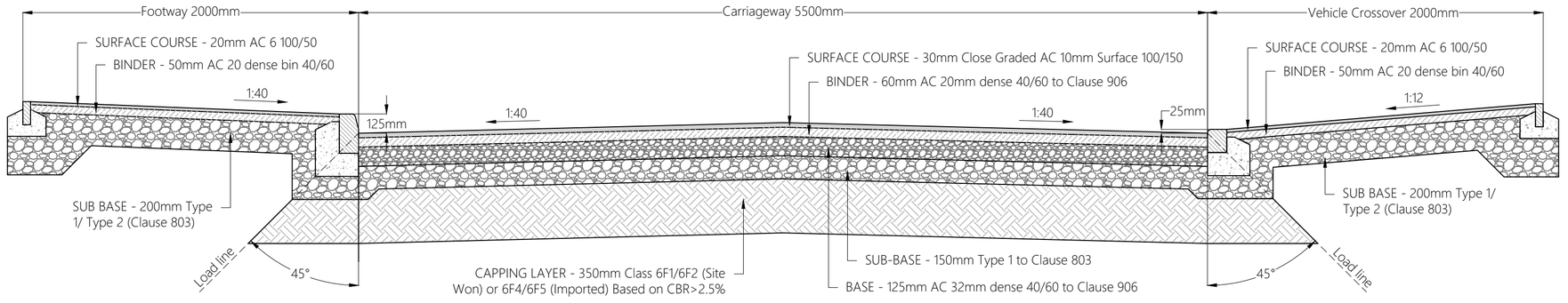

S38 SHARED SURFACE TABLE WITH FOOTWAY AND VEHICLE CROSSOVER CONSTRUCTION DETAIL

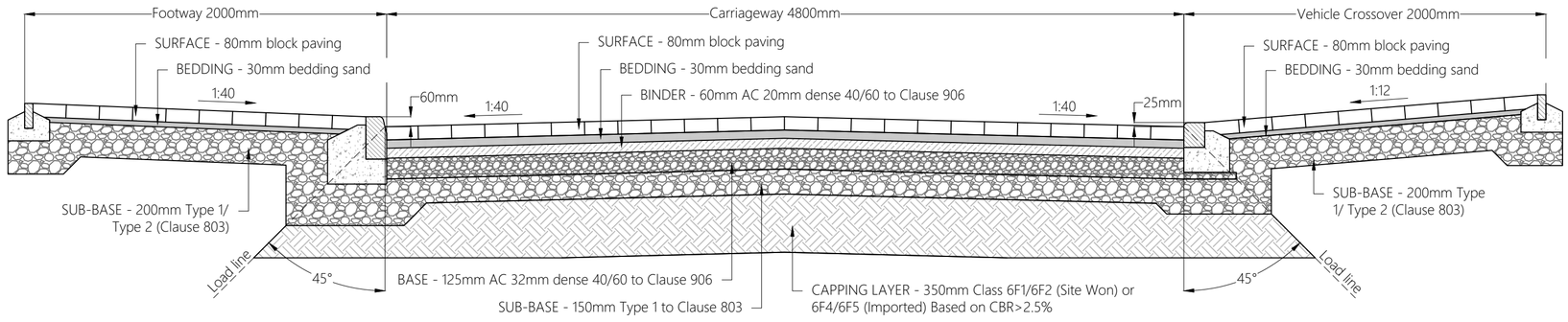

S38 SHARED SURFACE CONSTRUCTION DETAIL

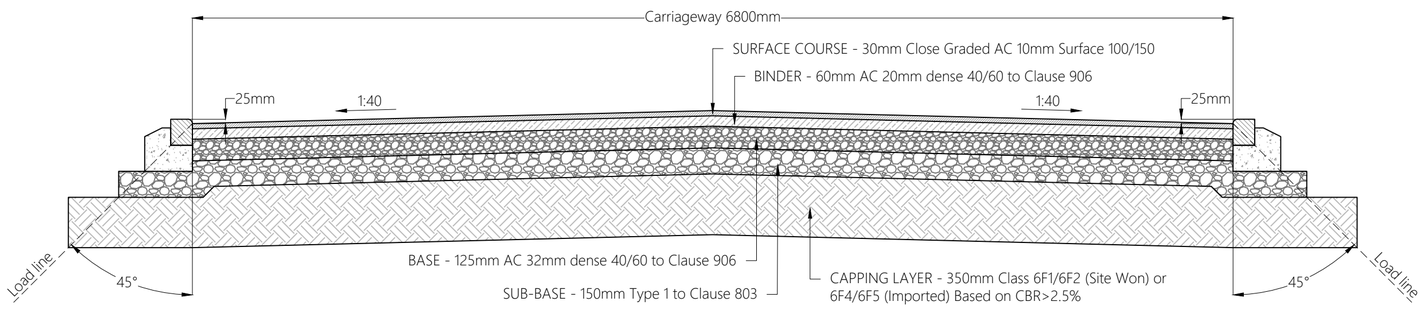

S38 CARRIAGEWAY WITH FOOTWAY AND VEHICLE CROSSOVER CONSTRUCTION DETAIL WITH IMPROVEMENT LAYER

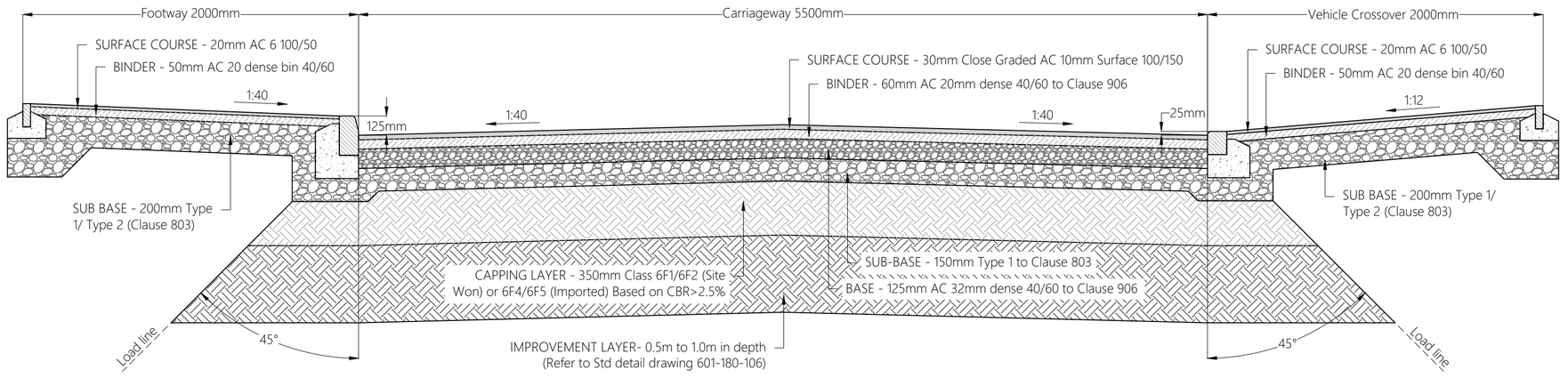

S38 SHARED SURFACE TABLE WITH FOOTWAY AND VEHICLE CROSSOVER CONSTRUCTION DETAIL WITH IMPROVEMENT LAYER

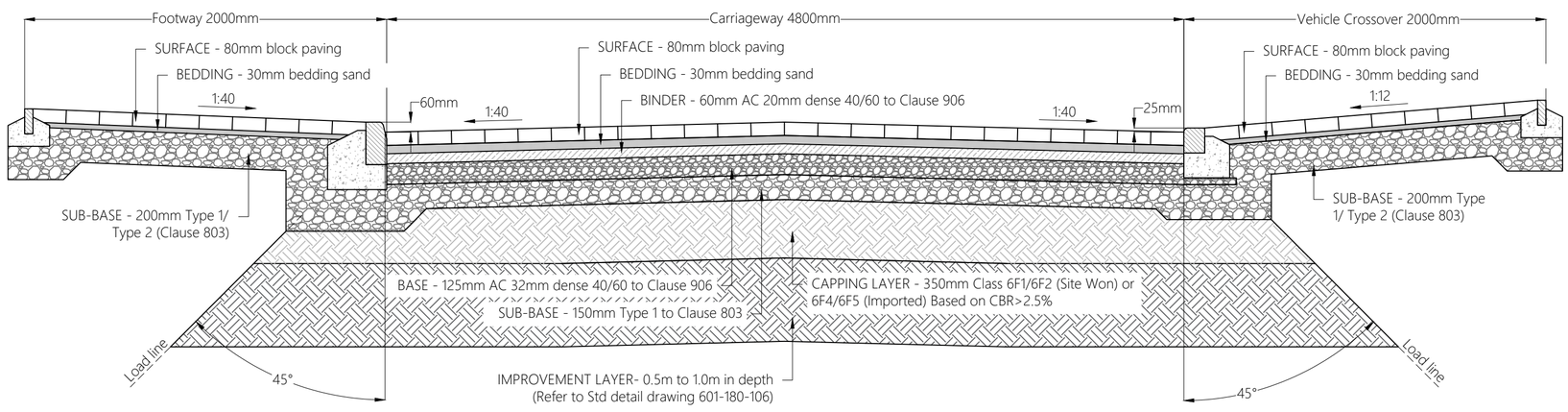

S38 SHARED SURFACE CONSTRUCTION DETAIL WITH IMPROVEMENT LAYER

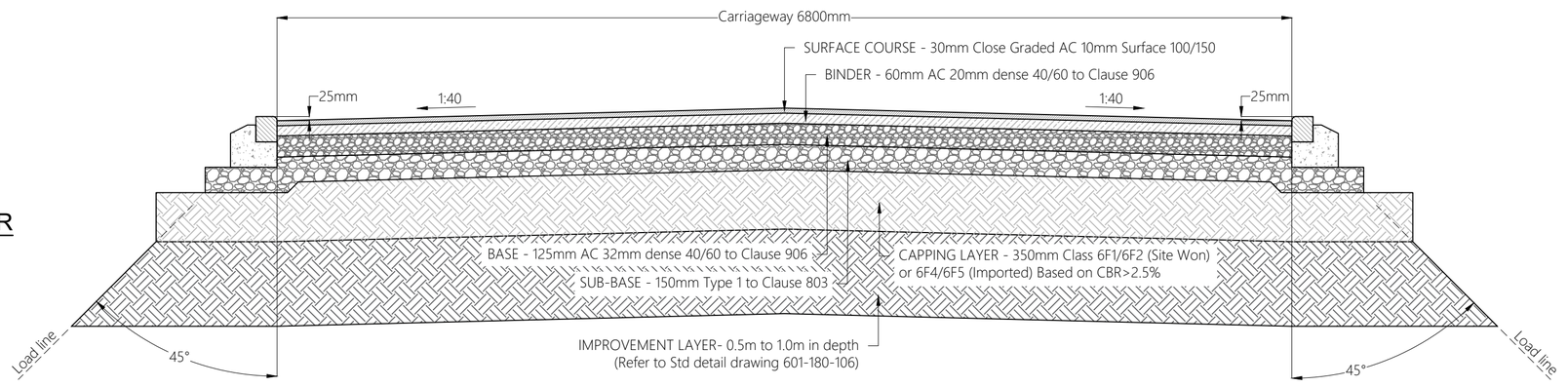

PERMEABLE SHARED SURFACE FOR NON ADOPTED AREAS CONSTRUCTION DETAIL

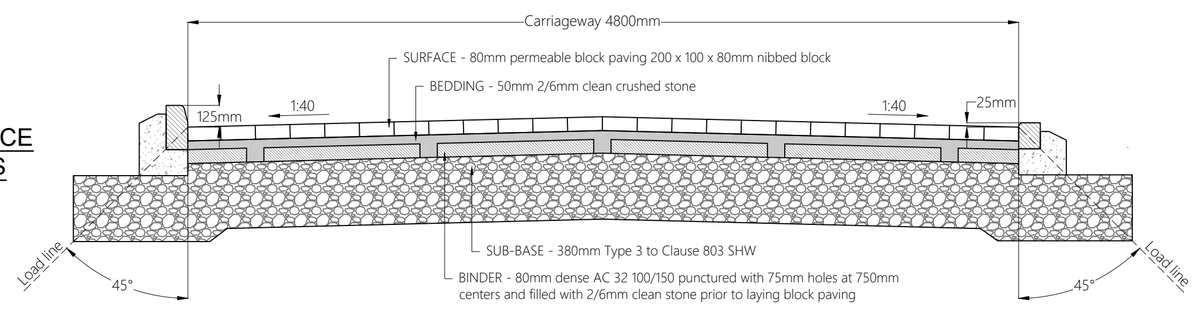

Notes

1. Do not scale from this drawing. All dimensions shown are in millimetres unless noted otherwise.
2. All kerb and edging concrete races shall be shuttered front and back to minimise excessive use of concrete.
3. Following West Sussex County Council (WSCC) Standard Construction Details to apply to adopted and non-adopted works unless stated otherwise:

Ordnance Survey Licence number: 100057360

Notes

West Sussex Construction Details

Drawing No.	Drawing Title
S278/38/01	Alternative methods of Laying Kerbs
S278/38/02	Approved Kerb Type Selection Sheet 1
S278/38/03	Approved Kerb Type Selection Sheet 2
S278/38/04	Footway/Cycleway Type 1 & 2
S278/38/06	Footway/Footpath (Rural) Type 5
S278/38/07	Footway Crossover Type 1 - Residential
S278/38/10	Preferred Arrangement of Services within Public Highway
S278/38/11	Drainage Gully A - Pre-Cast Concrete
S278/38/13	Drainage Type B Catchpit
S278/38/15	Street Furniture Rumble Strips
S278/38/16	Street Furniture Ramp Feature
S278/38/18	Street Furniture Tactile Crossings
S278/38/21	Carriageway Flexible Specification
S278/38/33	Drainage Pipe Bedding Details
S278/38/34	Drainage Cellular Storage (Sheet 1 of 2)
S278/38/35	Drainage Cellular Storage (Sheet 1 of 2)
S278/38/36	Drainage Lateral Connection

Drawing Revisions

Rev:	Drn:	Date:	Details	Chk:
C01	BM	16/04/2024	CONSTRUCTION ISSUE	BM

Client

Persimmon Homes
Thames Valley

Project

West Sompting, West Sussex

Title

Phase 1 Engineering Details
External Works - Typical Carriageway Sections

MILESTONE TRANSPORT PLANNING
7 Ancells Court, Rye Close, Fleet, Hampshire, GU51 2UY
Tel: 01483 397888
Gateshead IBC, Mulgrave Terrace, Gateshead, NE8 1AN
Tel: 0191 338 7220
web: www.milestonetp.co.uk

Drawing Number:

601-180-108

Scale:

N.T.S @ A1

Revision:

C01