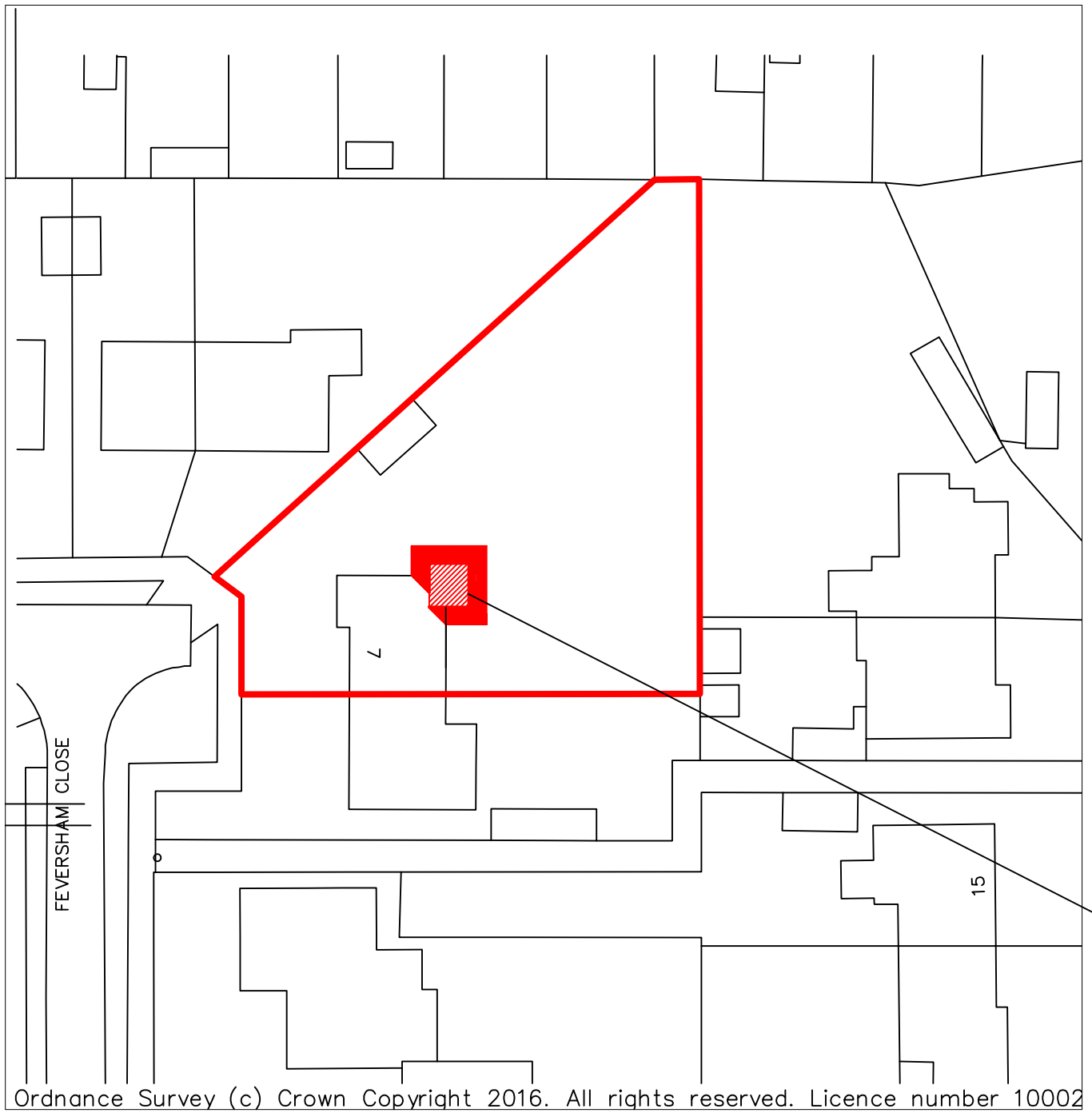

BLOCK PLAN 1:500

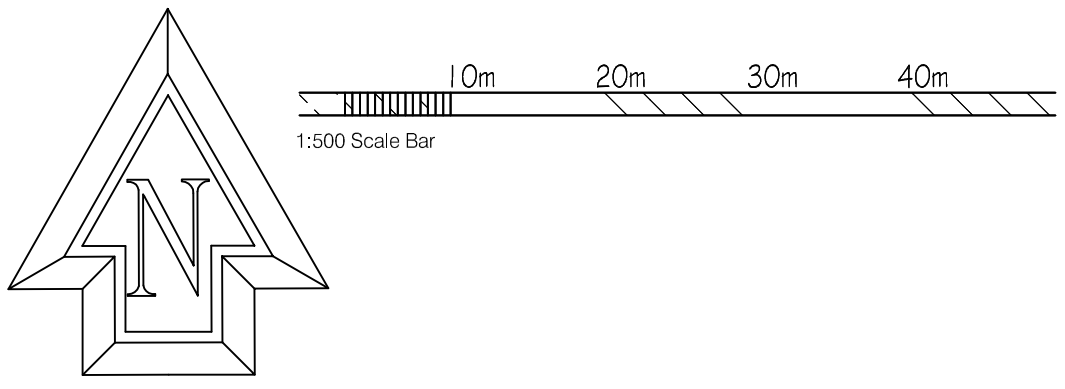

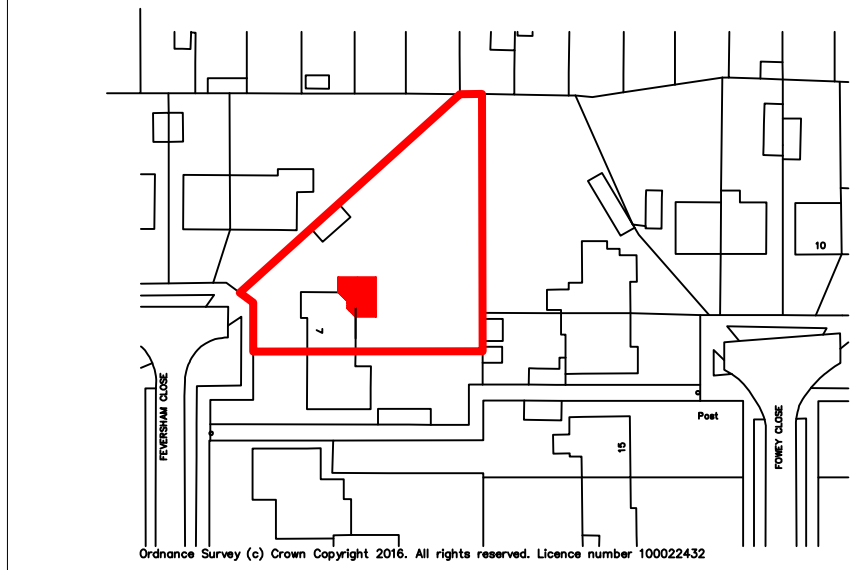

Location PLAN 1:250

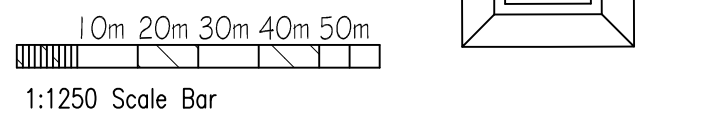

Note: All dimensions to be checked on site.

Copyright of:

BJW Architectural & Planning Services
15 West Street
Shoreham By Sea
West Sussex
BN43 5WF
01273 441009
07856899101
e-mail: benw@bjwarchitectural.co.uk
website: bjwarchitectural.co.uk

Project:
Proposed works at:
7 Feversham Close
Shoreham

Title:
BLOCK & Location PLAN

Client:

Scale:
1:500, 1:1250 @ A3 paper size

Date: 26.7.2016

Drawn: BJW

Drg. No. 05

Rev'n