HARNISS
Building Services Solutions

TRANSMITTAL FORM

TO: Lawrence Baker

FOR THE ATTENTION OF: Jason Wells

PROJECT: 1777-Worthing
SUBMITTAL NO: 1777 -HCL-ZZ-XX-TS-E-0205
DATE: 23/05/23

Please find enclosed the following:

Drawings ☐ Samples ☐ Specifications ✓ Technical submittal ✓

Change Order ☐ Other ☐

Please find attached for your comments/approval manufacturers Information and technical data associated with the:

Photovoltaic Panels

- ✓ **FOR APPROVAL**
- ☐ **FOR MANUFACTURE/CONSTRUCTION**
- ☐ **RESUBMIT COPIES FOR APPROVAL**
- ✓ **AS REQUESTED**
- ☐ **RETURNED FOR CORRECTIONS**
- ☐ **APPROVED AS NOTED**

- ✓ **FOR YOUR COMMENTS**
- ☐ **FOR YOUR INFORMATION**
- ☐ **SUBMIT COPIES FOR DISTRIBUTION**

PREPARED BY: *Kevin Powell*

FOR HARNISS CONTRACTING LTD

Please acknowledge safe receipt of the above-mentioned transmittal(s) with your comments/approval by signing below:

Acknowledgement required no later than: 06/06/23

REMARKS .....

.....

.....

.....

SIGNED BY: (CLIENT) ..... **DATE:** .....

Hi-MO 5m

(G2)

LR5-66HIH

490~510M

- Based on M10-182mm wafer, best choice for ultra-large power plants
- Advanced module technology delivers superior module efficiency
  - M10 Gallium-doped Wafer
  - Integrated Segmented Ribbons
  - 9-busbar Half-cut Cell
- Excellent outdoor power generation performance
- High module quality ensures long-term reliability

12 12-year Warranty for Materials and Processing

25 25-year Warranty for Extra Linear Power Output



Complete System and Product Certifications

IEC 61215, IEC 61730, UL 61730

ISO9001:2015: ISO Quality Management System

ISO14001: 2015: ISO Environment Management System

ISO45001: 2018: Occupational Health and Safety

TS62941: Guideline for module design qualification and type approval

LONGi

Hi-MO 5m

LR5-66HIH 490~510M

21.5%	0~3%	<2%	0.55%	HALF-CELL
MAX MODULE EFFICIENCY	POWER TOLERANCE	FIRST YEAR POWER DEGRADATION	YEAR 2-25 POWER DEGRADATION	Lower operating temperature

Additional Value

25-Year Power Warranty

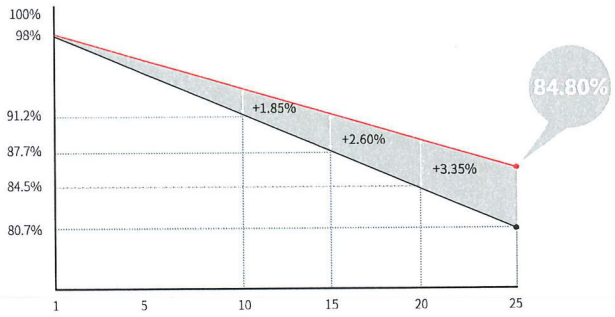

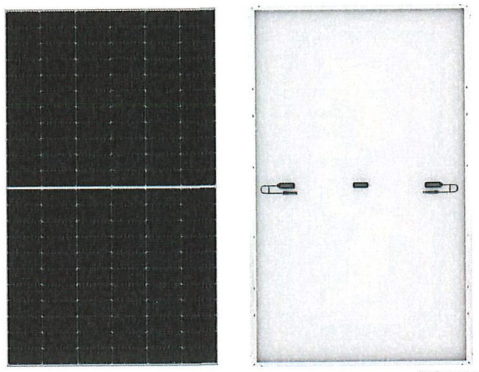

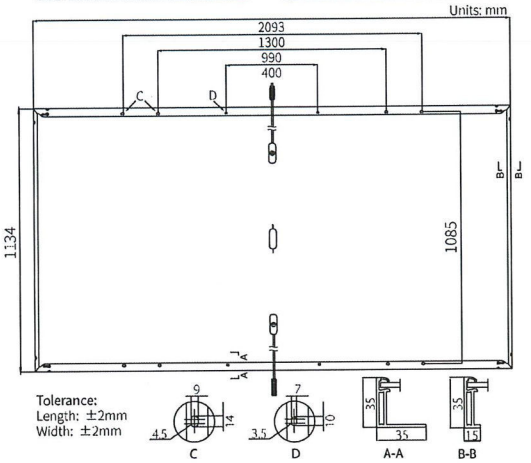

Mechanical Parameters

Cell Orientation	132 (6×22)
Junction Box	IP68, three diodes
Output Cable	4mm², +400, -200mm length can be customized
Connector	LONGi LR5 or MC4 EVO2
Glass	Single glass, 3.2mm coated tempered glass
Frame	Anodized aluminum alloy frame
Weight	25.3kg
Dimension	2093×1134×35mm
Packaging	31pcs per pallet / 155pcs per 20' GP / 682pcs per 40' HC

Electrical Characteristics

STC : AM1.5 1000W/m² 25°C NOCT : AM1.5 800W/m² 20°C 1m/s Test uncertainty for Pmax: ±3%

Module Type	LR5-66HIH-490M		LR5-66HIH-495M		LR5-66HIH-500M		LR5-66HIH-505M		LR5-66HIH-510M	
Testing Condition	STC	NOCT	STC	NOCT	STC	NOCT	STC	NOCT	STC	NOCT
Maximum Power (Pmax/W)	490	366.3	495	370.0	500	373.7	505	377.5	510	381.2
Open Circuit Voltage (Voc/V)	45.25	42.55	45.40	42.69	45.55	42.83	45.70	42.97	45.85	43.11
Short Circuit Current (Isc/A)	13.74	11.11	13.82	11.17	13.90	11.24	13.97	11.30	14.05	11.36
Voltage at Maximum Power (Vmp/V)	38.08	35.37	38.23	35.51	38.38	35.65	38.53	35.79	38.68	35.93
Current at Maximum Power (Imp/A)	12.87	10.35	12.95	10.42	13.03	10.48	13.11	10.55	13.19	10.61
Module Efficiency(%)	20.6		20.9		21.1		21.3		21.5	

Operating Parameters

Operational Temperature	-40°C ~ +85°C
Power Output Tolerance	0~3%
Voc and Isc Tolerance	±3%
Maximum System Voltage	DC1500V (IEC/UL)
Maximum Series Fuse Rating	25A
Nominal Operating Cell Temperature	45±2°C
Protection Class	Class II
Fire Rating	UL type 1 or 2 IEC Class C

Mechanical Loading

Front Side Maximum Static Loading	5400Pa
Rear Side Maximum Static Loading	2400Pa
Hailstone Test	25mm Hailstone at the speed of 23m/s

Temperature Ratings (STC)

Temperature Coefficient of Isc	+0.050%/°C
Temperature Coefficient of Voc	-0.265%/°C
Temperature Coefficient of Pmax	-0.340%/°C

LONGi

Floor 19, Lujiazui Financial Plaza, Century Avenue
826, Pudong Shanghai, China
Tel: +86-21-80162606
Web: www.longi.com

Specifications included in this datasheet are subject to change without notice. LONGi reserves the right of final interpretation.

(20220410PreliminaryV01) G2

solis

Solis-30K

Solis Three Phase Inverters



Features:

- Solis Three Phase Range
- Over 98.8% Max. effciency
- 200V-800V MPPT voltage range-ultra low startup
- 7.0" LCD color screen display
- Four MPPT design with precise MPPT algorithm
- Compact and light design, easy installation
- IP65 rated for outdoor installation
- Anti-resonance, single transformer can connect 6M+ in parallel
- RS485, WiFi/LAN/GPRS (optional) interface
- WiFi monitoring available-Android and Apple App store available
- 5 years standard warranty, 20 years optional upgrade

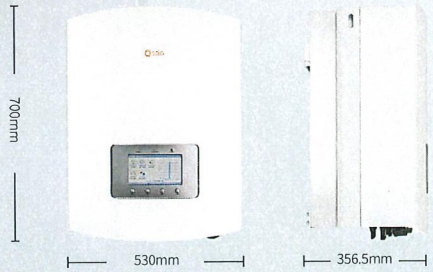

Model:

400V: Solis-30K

solis

Datasheet

Model Name	Solis-30K
Input DC	
Max. DC input power(kW)	36
Max. DC input voltage(V)	1000
Start-up voltage(V)	350
MPPT voltage range(V)	200-800
Max. input current(A/B/C/D)	18A+18A+18A+18A
MPPT number/Max input strings number	4/A:2; B:2; C:2; D:2
Output AC	
Rated output power(kW)	30
Max. apparent output power(kVA)	33
Max. output power(kW)	33
Rated grid voltage(V)	400
Rated grid frequency(Hz)	50/60
Grid frequency range(Hz)	47-52 or 57-62
Operation phase	Three Phase
Rated grid output current(A)	43.3
Max. output current(A)	50
Power Factor (at rated output power)	0.8leading ... 0.8lagging
THDi (at rated output power)	<3%
DC injection current	<0.5%In
Efficiency	
Max. efficiency	98.6%
EU efficiency	98.3%
MPP Tefficiency	>99.9%
Protection	
DC reverse-polarity protection	Yes
Short circuit protection	Yes
Output over current protection	Yes
Output over voltage protection	Yes
Insulation resistance monitoring	Yes
Residual current detection	Yes
Surge protection	Yes
Grid monitoring	Yes
Islanding protection	Yes
Temperature protection	Yes
Integrated DC switch	Optional
General Data	
Dimensins(mm)	530W*700H*356.5D
Weight (kg)	58.2
Topology	Transformerless
Self consumption (night)	<1W (Night)
Operating ambient temperature range	-25~60°C
Relative humidity	0~100%
Ingress protection	IP65
Noise emission(typical)	<30 dBA
Cooling concept	Natural convection
Max. operation altitude	4000m
Designed lifetime	>20 years
Grid connection standard	EN50438, G59/3, AS4777, VDE0126-1-1, IEC61727, G99
Safty/EMC standard	IEC62109-1/-2, AS3100, EN61000-6-1, EN61000-6-3
Features	
DC connection	MC4
AC connection	Terminal connectors
Display	7.0" LCD color screen display
Communication connections	4 pins RS485 connector, 2 RJ45 connector, 2 group of terminal block
Monitoring	WiFi or GPRS
Warranty	5 years (extand to 20 years)



VAN DER VALK
SOLAR SYSTEMS

ValkPro+

Installing solar panels on buildings of any kind is a logical development, as the roof offers free space and often a surface large enough for a profitable additional function. Van der Valk's solar mounting system for flat roofs was developed while taking roof and wind loads into account and, consequently, complies with the most stringent safety requirements.

Our range for flat roof is characterised by great efficiency and ease of assembly. The three south-oriented basic systems described below enable optimal utilization and maximum energy yield for each flat roof.

Common features

of the ValkPro+ 10° Landscape, ValkPro+ 15° Landscape and the ValkPro+ 10° Portrait:

- ✓ Speed of mounting: 4-5 minutes per panel (east-west or south arrangements)
- ✓ Metal connectors (no plastic), which prepares the assembly for earthing and lightning protection
- ✓ Standard format applicable up to 25 m height (higher options upon request)
- ✓ Minimum number of articles required
- ✓ Low ballast, supported by national standards and wind tunnel testing
- ✓ Also suitable for 2 m and 'high power' panels

Mounting: south

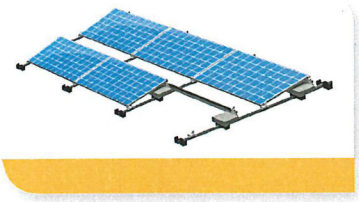

ValkPro+ L10

Unique to this system:

- ✓ Landscape mounting
- ✓ 10° tilt angle
- ✓ Standard pitch size south: 1500 mm
- ✓ Standard pitch size east-west: 2300 mm

Mounting: east - west

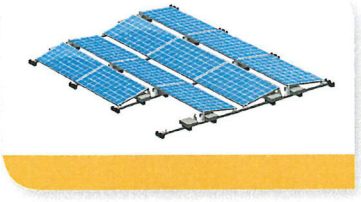



ValkPro+ L15*

Unique to this system:

- ✓ Landscape mounting
- ✓ 15° tilt angle
- ✓ Standard pitch size south: 1500 mm
- ✓ Standard pitch size east-west: 2300 mm





ValkPro+ P10*

Unique to this system:

- ✓ Portrait mounting
- ✓ 10° tilt angle
- ✓ Standard pitch size south: 2300 mm
- ✓ Standard pitch size east-west: 3500 mm



*Available from Q2 - 2019

Foundations Flat roof Systems

The **ValkPro+ L10°**, the **ValkPro+ L15°** and the **ValkPro+ P10°** utilize various foundations. For example, the systems can be attached using rubber tile carriers, mass blocks or consoles.

Rubber tile carriers offer ease of transport and installation due to their low weight and raise the system for maximum drainage.

Mass blocks have the advantage that they concurrently provide a significant part of the ballast. They also raise the system even more, which ensures easier mounting for example in a field setting.

Consoles provide a fixed mounting to the roof in areas with very high wind loads or to roofs that can't tolerate much weight. The special design guarantees watertight sealing.

	ValkPro+ 10° Landscape	ValkPro+ 15° Landscape	ValkPro+ 10° Portrait
Rubber tile carriers	✓	✓	✓
Mass blocks	✓	✓	✓
Consoles	✓	✓	✓

This specifies which foundation can be applied.

Glass panels

As well as the standard solar panels with a frame, solar panels without a frame can also be mounted using glass clamps.

Free Software

With the ValkPVplanner, our free software, a complete calculation, including a list of articles and project-specific installation manual, can be realised in three simple steps.

WHY VAN DER VALK SOLAR SYSTEMS?

- Innovative systems developed in compliance with applicable worldwide standards
- Fast and reliable deliveries thanks to modern machinery and large stocks
- System supplier since 1963
- Free use of software for project design and project calculation
- All systems applicable to any type of roof or surface
- Quick assembly thanks to premounting of essential components
- Great flexibility in solutions
- Various systems also available as ready-to-use kits



The mounting systems of Van der Valk Solar Systems are delivered and installed by an extensive network of dealers and installers. We would be happy to help you find your closest point of contact.

For more information (i.e. datasheets, pricelists and manuals) go to the downloads on our website.

Van der Valk Solar Systems develops and produces solar mounting systems for:



Pitched roofs | Flat roofs | Open fields | Greenhouses | Water features

VAN DER VALK SOLAR SYSTEMS

V05-2018

PLEASE CONTACT VAN DER VALK SOLAR SYSTEMS OR YOUR DEALER / INSTALLER FOR FULL INFORMATION.

CONTACT DETAILS VALK SOLAR SYSTEMS | DEVELOPER AND PRODUCER OF SOLAR MOUNTING SYSTEMS

The Netherlands
Zwartendijk 73, 2681 LP Monster
The Netherlands, T +31 (0)174 212223
info@valksolarsystems.nl
www.valksolarsystems.nl

United Kingdom + Ireland
Innovation House, Discovery Park, Innovation Way,
Sandwich CT13 9FF United Kingdom
T +44 (0)1304 897658, info@valksolarsystems.co.uk
www.valksolarsystems.co.uk

International
Zwartendijk 73, 2681 LP Monster
The Netherlands, T +31 (0)174 212223
info@valksolarsystems.com
www.valksolarsystems.com

A1100 Electronic Polyphase Meter

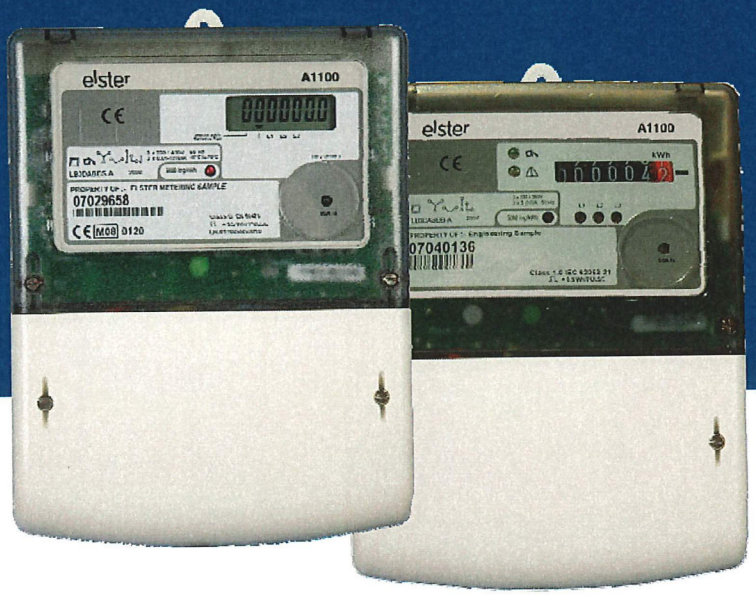

Advanced, cost effective polyphase metering...

Features

- Accuracy – Class 1 or Class 2, EC Directive 2004/22/EC (MID) - kWh Class A or Class B
- kWh import or kWh import/export
- Direct or CT connected
- 3 phase, 4 wire or 3 phase, 3 wire
- 16 year product life
- Large figure display (9.8mm)
- Extensive security data
- IrDA (Infrared Data Association) output for transmitting billing, security and status data
- 12kV impulse withstand
- Compact design
- Double insulated, glass filled polycarbonate case
- DIN 43857 Part 2 and Part 4 (except for top fixing centres)
- IP53 in accordance with IEC 60529:1989

Options

- Liquid Crystal Display or mechanical register
- One or two rates controlled by an external device (LCD meter only)
- Auxiliary terminals configured for:
  - SO pulsed output (IEC 62053-31)
  - Rate selection (two rate meters)
  - Serial data output
- Extended terminal cover with or without cut-out

The use of innovative metering technology provides cost-effective metering that is highly secure and maintains a high degree of accuracy over its full operating range. The A1100 meter is suitable for direct connected or CT operated domestic, commercial and light industrial polyphase applications.

Two main versions of the A1100 meter are available. The liquid crystal display version of the meter can be supplied as a one or two rate meter. The meter is available as import only or import and export. The display has a customer defined display sequence that can include security information. Chevrons and legends on the nameplate identify the data being displayed.

The mechanical register version only offers import kWh, one rate. Five LED's are used to identify the status of the meter.

Communications is provided via the IrDA port allowing the meter registers and security data to be read electronically using a hand-held device. As an option the same absolute data can be transmitted via the meter's auxiliary terminals making it ideal for AMI applications.

Meters can be supplied to meet accuracy Class 1 or Class 2 or EC Directive 2004/22/EC (MID) - kWh Class A or Class B.

elster

Display

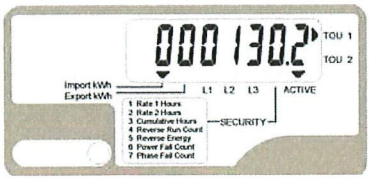

The LCD version of the A1100 displays register and security information by the use of chevrons and digits. The mechanical register version has up to 7 digits and five LED's for reporting status information.

Meter nameplates can be printed in any language.

Security

The A1100 offers high security with many useful security features. The meter stores all registration and configuration data to non-volatile memory. All data is retained for the life of the meter.

Security features are illustrated below.

	LCD Meter		Mechanical Meter	
Event	LCD	IrDA/Serial	LED	IrDA/Serial
Phase A Present	+		+	
Phase B Present	+		+	
Phase C Present	+		+	
Reverse Event Count	+	+		+
Reverse Run Reading	+	+		+
Reverse Alarm	+		+	
Power Fail Count	+	+		+
Phase Fail Count	+	+		+
Elapsed Hours Rate 1	+	+		+
Elapsed Hours Rate 2	+	+		+
Elapsed Hours Cumulative Display	+			
Meter Error	+	+	+	+

As an option the kWh register can increment in power flow insensitive mode i.e. it increments regardless of energy flow direction.

Pulse Output

An opto-isolated pulse output can provide the basis for an energy management system or AMR. These pulses are output via the meter's auxiliary terminals. The output conforms to IEC 62053-31.

System Connections

2 Element	3 phase, 3 wire
3 Element	3 phase, 4 wire
	2 phases of a 3 phase, 4 wire
	2 phase, 3 wire
	1 phase, 3 wire
	1 phase, 2 wire (LCD meter only)

IrDA Communications



The IrDA (Infrared Data Association) communications port provides one way communications, transmitting a continual data stream from the meter to an external device. An error checking algorithm protects the integrity of the data.

As an option the same absolute data is available via the meter's auxiliary terminals. Both ports use the OBIS: IEC 62056-61 data identifiers.

Important information is provided:

Meter registers
Security features
Status information
Identification

The port transmits over a distance of 250mm.

Technical Data

Current Range	Direct connected 20 - 100A, 10-60A CT operated 5-6A or 5-10A
Voltage Range	220-240V (L-N) or 220-240V (L-L) 110-120V (L-N) or 110-120V (L-L)
Frequency	50 or 60Hz
Burden Voltage Circuits (230V) Current Circuits	 0.9W, 9VA capacitive burden/phase [max] 2VA @ 100A/phase [max]
Insulation Impulse Withstand	4kV RMS 50Hz 12kV 1.2/50µs 500 ohm source
Display LCD	9.8 x 3.5mm characters High contrast, wide angle 5, 6 or 7 digits
Mechanical Register	6.7 x 3.5mm characters 6 or 7 digits
IrDA Baud Rates Serial Baud Rates	2400, 4800 or 9600 (Without serial port) 2400 or 4800
Product Life	16 years
Certified Product Life	10 years
Temperature	-40° to + 55° C (Operational range) -40° to + 85° C (Storage)
Humidity	Annual mean 75% (For 30 days spread over one year, 95%)
Pulse Width Wh/pulse	10 to 250ms or equal mark/space 1, 2, 4, 5, 10, 20, 25, 40, 50, 100
Weight	860 grams
Specifications	kWh Class 1 or 2 IEC 61036:1996 EC Directive 2002/22/EC (MID) kWh Class A or Class B
Case	IP53 to IEC 60529:1989

Dimensions and Fixing Centres

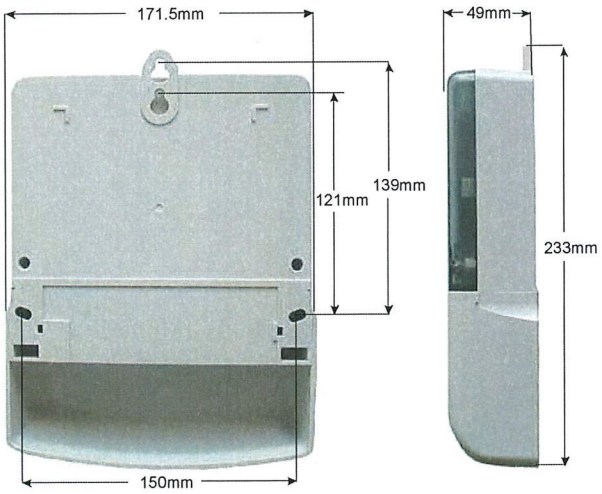

Our policy is one of continuous product development and the right is reserved to supply equipment which may vary slightly from that described.

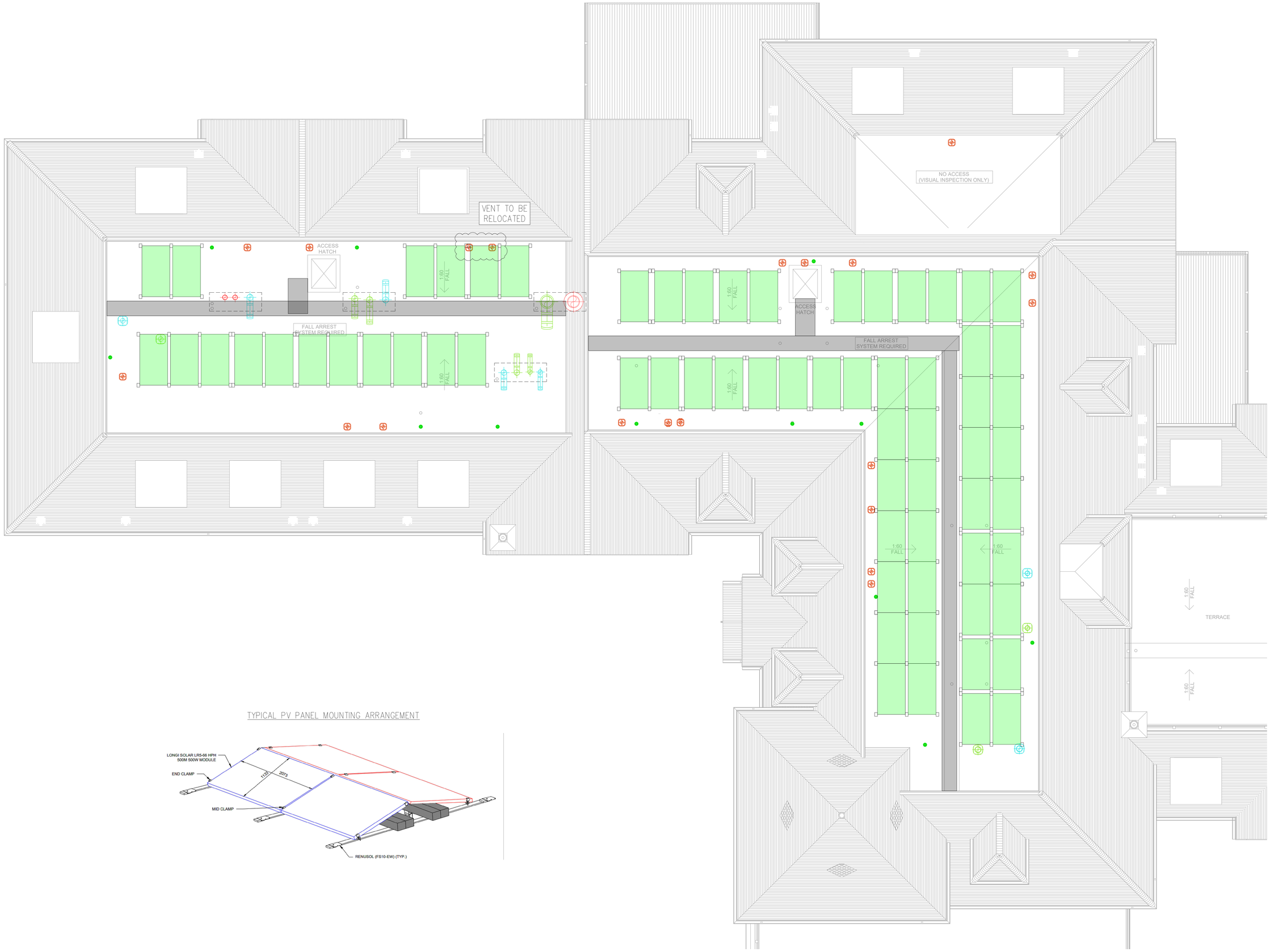

TYPICAL PV PANEL MOUNTING ARRANGEMENT

NOTES:

1. THIS DRAWING SHALL BE READ IN CONJUNCTION WITH ANY RELEVANT STRUCTURAL, ARCHITECTURAL & CONSULTANTS DRAWINGS/SPECIFICATIONS.
2. THIS DRAWING IS NOT TO BE SCALED.
3. ALL DIMENSIONS STATED IN mm.

REV	DATE	DETAILS OF REVISION	BY
P03	10.05.23	ROOF LAYOUT UPDATED	CC
P02	21.03.23	REVISED PV DESIGN	CC
P01	10.08.22	ISSUED FOR COORDINATION	CC

HARNISS CONTRACTING
www.harniss.co.uk
1 Weekley Wood Avenue,
Kettering, Northants, NN14 1UQ
Tel: 01933 656850
Email: info@harniss.co.uk

CLIENT
LAWRENCE BAKER
(CINNAMON CARE CAPITAL)

PROJECT
PROPOSED CARE HOME
WARREN ROAD
WORTHING

DRAWING TITLE
MEP SERVICES
ROOF LEVEL
PV SKETCH

Issue Status
FOR INFORMATION

Original Size	Scale	Drawn
A0	1:50	CC
HCL Project No.	Suitability	Checked
1777	-	-

Project - Originator - Volume - Level - Type - Role - Number
1777 - HCL - ZZ - XX - DR - ME - SK01

© Copyright Harniss Ltd
Copyright in this drawing belongs to Harniss Ltd. This drawing may not be used, sold, licensed, transferred, copied or reproduced in whole or in part or in any manner or form other than with the prior written consent of Harniss Ltd.

DRAWING REF:	REV:	DATE:	DATE RECIEVED:	DATE UPDATED:
1285C-RDT-ZZ-03-DR-A-2400	P2.1	03.04.23	03.04.23	10.05.23