REVISIONS				
ZONE	REV.	DESCRIPTION	DATE	APPROV.
	2A	SCALE ADDED	27/04/2024	

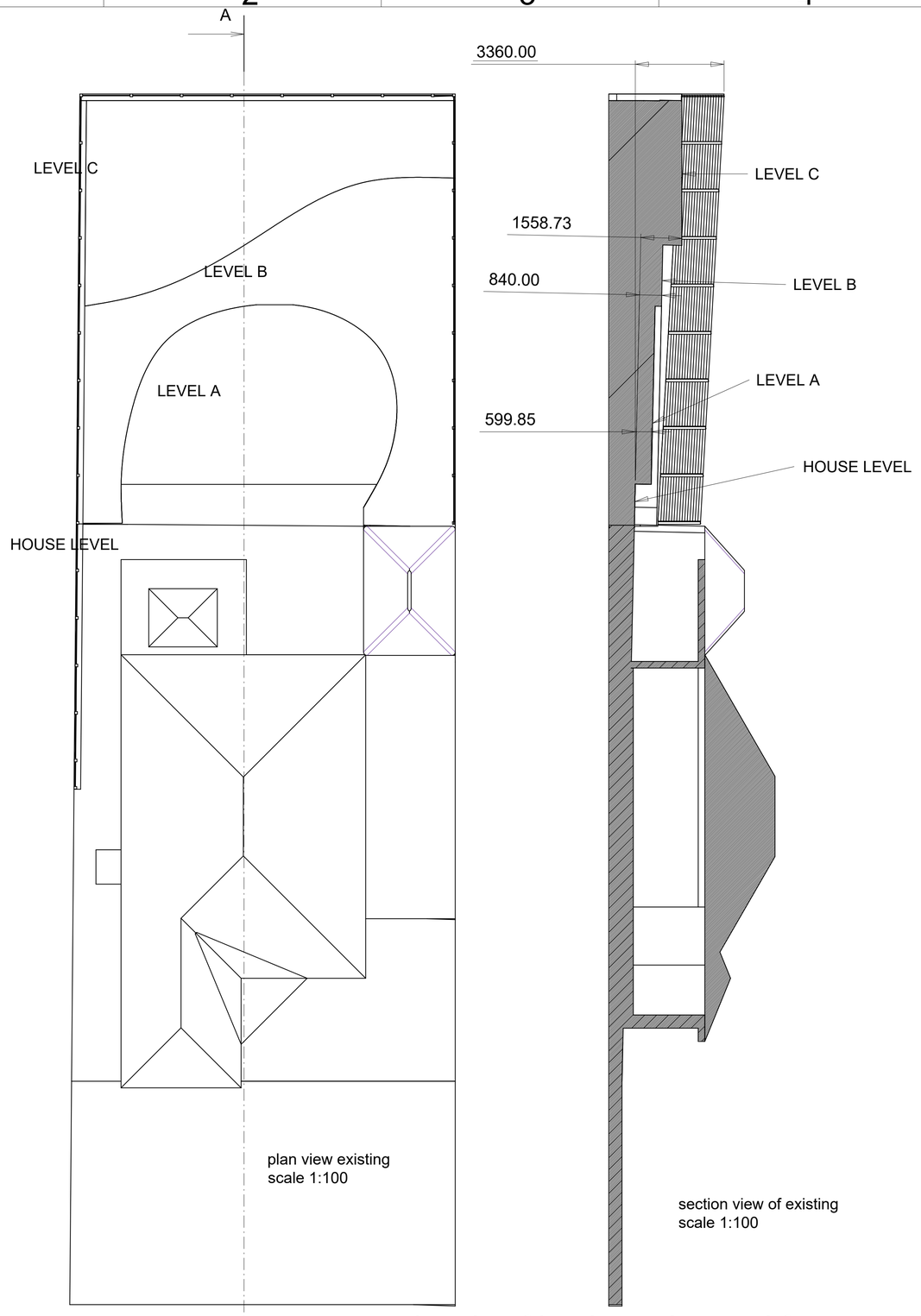

plan view existing
scale 1:100

section view of existing
scale 1:100

current levels of back garden and fences

0 5m 10m

SCALE 1:100

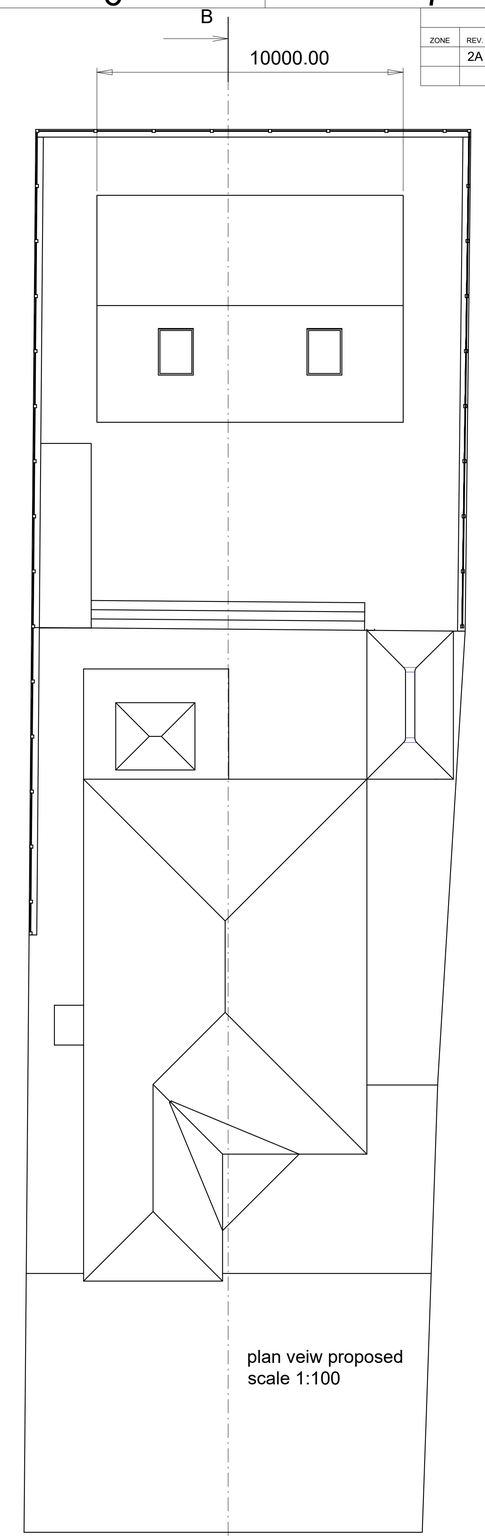

plan veiw proposed
scale 1:100

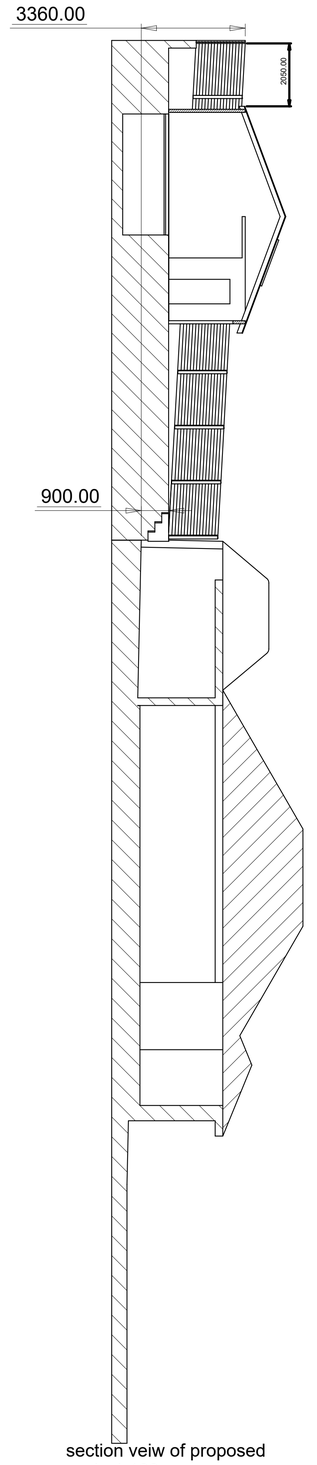

section veiw of proposed
scale 1:100

proposed level of back garden
(fences to remain at current level)

	NAME	DATE	SIG.	
DRAWN	CB	24-4-2024		DRAWING OF EXISTING & PROPOSED LEVELS
DESIGN				
CHECKED				
APPROVED				SIZE A1 REV. 2A DWG. No. CB0001-10
SURF. TEXTURE		OVERALL TOL.		SCALE SHEET 1 OF 1 SHEETS