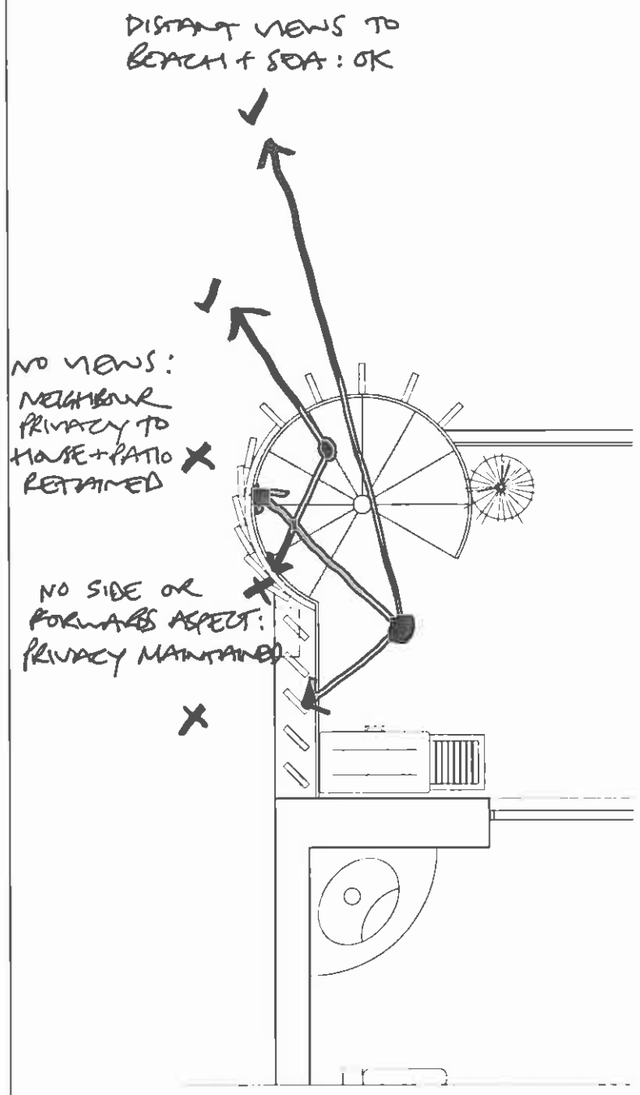

REAR BALCONY (FIRST FLOOR)

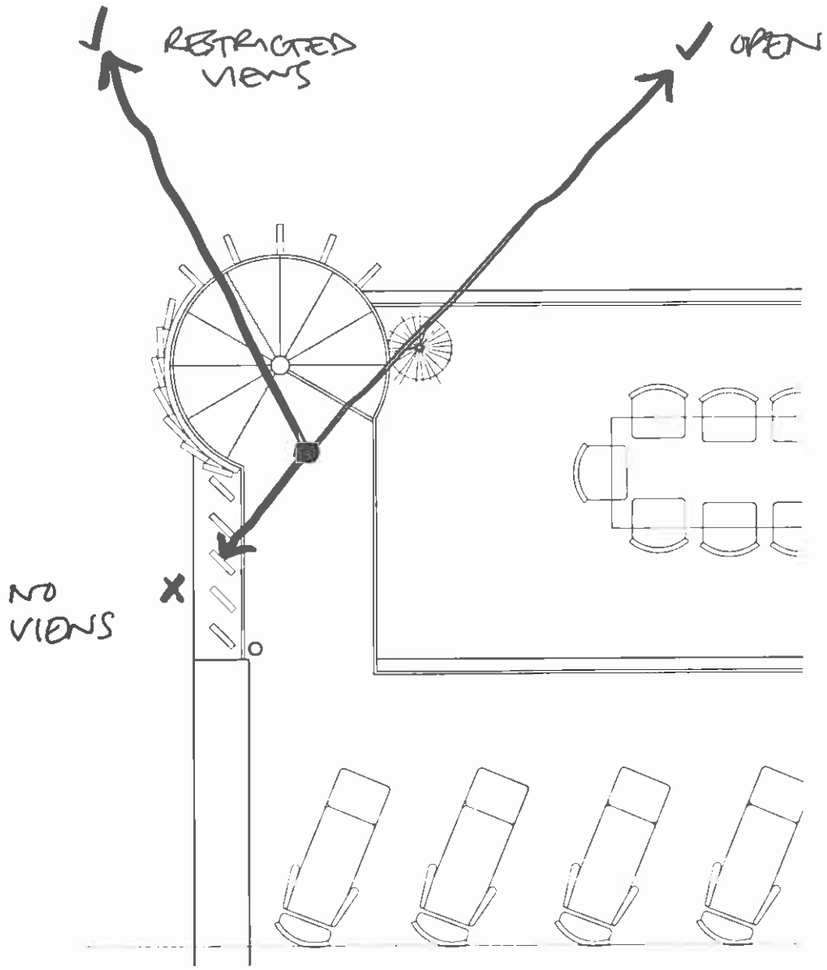

ROOF TERRACE

NOTES

Do not scale from this drawing.

Any discrepancies should be reported immediately.

This drawing is copyright. It must not be reproduced or disclosed to third parties without our prior permission.

This drawing is to be read in conjunction with all relevant consultants, specialist manufacturers drawings and specifications.

Any surveyed information incorporated within this drawing cannot be guaranteed as accurate unless confirmed by fixed dimension.

All dimensions are in millimetres unless noted otherwise.

dwell
studio@dwellarchitecture.com
www.dwellarchitecture.com
Tel: 01444 831 800
Fax: 01444 220 499

Drawing Status

PLANNING

Client
Jackie Verrall & Declan Mooney

Project
Alterations and Improvements
108 Old Fort Road, Shoreham-by-Sea, West Sussex

Title
Staircase Screening Strategy

Dwg. 1335 DT 01 Rev.

Job No.	Date	Scale	Drawn	Checked
1335	23/07/2018	1:50 @ A3	JSR	JSR