CITYZEN IS THE TRADING NAME FOR CITYZEN LIMITED; REGISTERED OFFICE: PRESTON PARK HOUSE, BRIGHTON, BN1 6SB; REGISTERED NUMBER: 10634993

A0 : 841 x 1189

## NOTES:

- ALL DIMENSIONS ARE IN MM, UNLESS STATED OTHERWISE.
- ANY ERRORS OR OMISSIONS TO BE NOTIFIED TO CITYZEN IMMEDIATELY.
- CITYZEN IS NOT RESPONSIBLE FOR ANY BUILDING WORK THAT IS CARRIED OUT ON SITE.

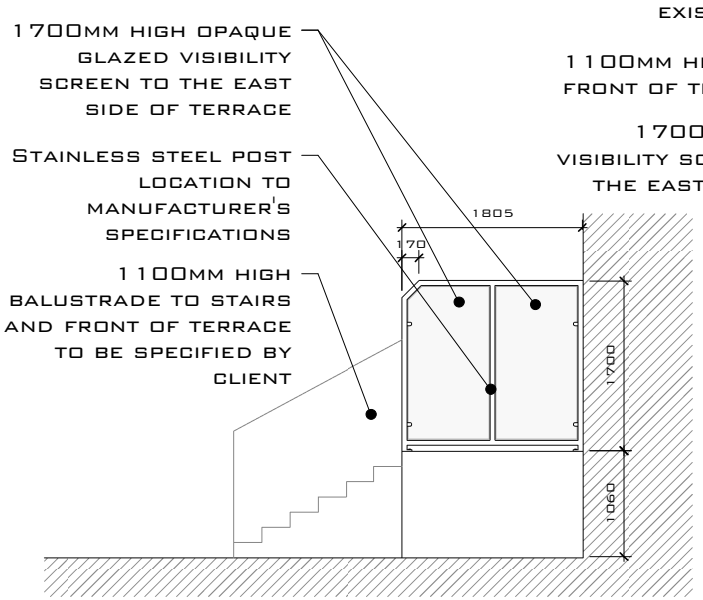


PRIVACY SCREEN

1 : 50 @ A3

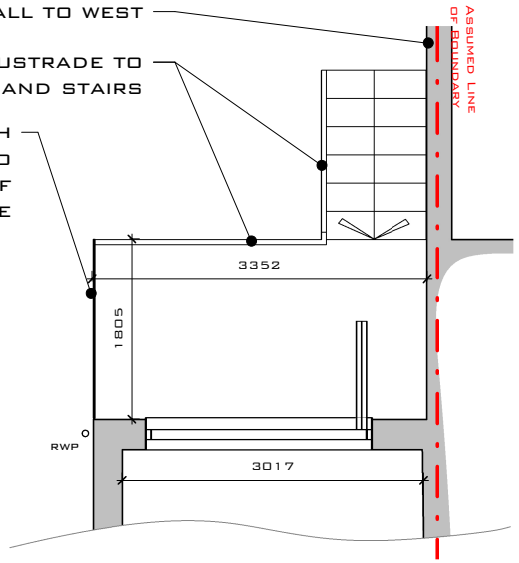


PROPOSED REAR TERRACE

1 : 50 @ A3



REFERENCE OF PRIVACY SCREEN TO BE INSTALLED

| REV | DATE | REVISION | DRAWN | CHECKED | APPROVED |
|---|---|---|---|---|---|

PLANNING

0M 1M 2M 3M 4M 5M

SCALE BAR @ 1:50

CLIENT: CHESTERMAN HOMES

PROJECT: 114 OLD SHOREHAM ROAD - REAR TERRACE

TITLE: PRIVACY SCREEN DETAILS

CITYZEN ARCHITECTURE | ENVIRONMENT
MARITIME HOUSE
BASIN ROAD NORTH
HOVE
EAST SUSSEX
BN41 1WR
CONTACT@CITYZENDESIGN.CO.UK
WWW.CITYZENDESIGN.CO.UK
01273 704 901
Chartered Institute of Architectural Technologists
Registered Practice

SCALE: 1 : 50 @ A3

DESIGNER: AINARA GOIKOETXEA

©COPYRIGHT CITYZEN LIMITED

DATE: 03.11.17

DRAWING: PROJECT REF - DRG NO. (REVISION)

1702 -PL - 503 -

File Path: Z:\01 Projects\Cityzen\1700\1702 114 Old Shoreham Road (refurb)\3 - Project Documentation\3.1 Drawings\03 - Revit\1702-PL-Rear terrace application.rvt