ROLEC

EVO

Intelligent EV charging unit

UK Manufacturer

reddot winner 2024

EVO

Intelligent EV charging unit

The EVO charging unit is an affordable, compact, and stylish EV charging solution designed for both drivers and installers.

Available in 7.4kW and 22kW models, it offers an easy-to-use, fully compatible charging solution for all EVs and PHEVs.

EVO also supports solar integration, allowing users to activate Eco+ mode, which only allocates any available surplus solar power to the vehicle for a 100% renewable, cost-free charge.

With the EVO app, users have full control of their charger including the ability to set charging schedules and integrate with smart tariffs to save on off-peak rates. Alternatively, users can connect their charger to any OCPP app of their choice.

EVO ensures a seamless charging experience, keeping EVs ready for their next electrified adventure.

reddot winner 2024

Product features

- Suitable for both domestic and light commercial installations
- Plug & go, mobile app or RFID controlled charging
- Universal charging socket with cable lock
- Up to 7.4kW or 22kW charging output
- Free ROLEC EVO mobile app
- 2x EVO RFID charging cards included
- Scheduled / off-peak charging
- Surplus solar charging compatible
- PME fault detection* (no earth rod required)
- Dynamic load balancing (CT clamp & cable included**)
- Three to Single Phase switching (22kW model only)
- OCPP 1.6 compliant (integrates with any chargepoint management system)
- AC 30mA Type-A and DC 6mA protection
- Built-in LED charging status indicator
- Cable lock security feature (can be permanently locked by owner)
- UK Smart Charge Point Regulations Compliant including tamper security
- 4G (22kW model only) / Wi-Fi / Ethernet connectivity
- Strong and durable IP54 / IK10 rated
- Corrosion and fire resistant
- Wall or post mounting options
- OZEV grant fundable (UK only)

*Selectable on installation of 22kW Three Phase model

**Single Phase models only, Three Phase models require optional CT kit

OCPP 1.6 compliant

Ability to integrate with any OCPP compliant chargepoint management system and app.

Easy to operate

Three quick and easy ways to operate: mobile app, NFC / RFID, or plug & go.

EV regulations compliant

Safe, secure and fully UK Smart Charge Point Regulations compliant including tamper security

Always connected

Secure 4G (22kW model only), Wi-Fi and Ethernet connectivity, ensuring chargers are always online 24/7.

Under 15 minute easy installation

Ready in as little as 15 minutes with seamless integration into the home with the EVO app.

No earth rod required

Equipped with built-in PME fault detection, saving installation time and costs.

The details

UP TO 22KW

Available in both single phase and three phase models, providing up to 22kW superfast charging.

EVO is compatible with all EVs & PHEVs, charging at the fastest speed possible, ensuring vehicles are ready to go in no time.

EASY CONFIGURATION

Installers can easily configure and test the EVO, and any other chargepoint in the ROLEC EV product range, by using the ROLEC CONNECT app. Simply follow the step-by-step process.

GET IT ON Google Play

Download on the App Store

LOAD BALANCING

Utilising the latest EV technology, the EVO supports dynamic load balancing, which integrates into your home electrical system and reduces peaks in your energy usage by intelligently adjusting power output depending on your household's energy consumption.

SOLAR COMPATIBLE

EVO offers three charging modes;

ECO uses solar by day and scheduled grid power at night for cheaper charging

ECO+ uses only surplus solar energy to charge

Charge Now offers a maximum charge at any time

5 YEAR WARRANTY

EVO comes with a 5 year warranty as standard, for added peace of mind on your investment.

Over-the-air updates allow the chargers to receive the very latest features, ensuring a safe and future-proof product 24/7.

Specifications

Product Overview

	Connection Type	AC Charging Output(s)	Input Supply(s)	Unit Colour	Product Code
Single Phase Units	1x Universal charging socket	Up to 7.4kW (32A)	1x Up to 32A Single Phase* 230V AC (±10 %) 50/60Hz	● Daytona Grey	ROLEC5011
Three Phase Units	1x Universal charging socket	Up to 22kW (32A)	1x Up to 32A Three Phase* 400V AC (±10 %) 50/60Hz	● Daytona Grey	ROLEC5013

*Should supply be limited, chargepoint(s) can be configured to any output (min. 6A)

Specifications

Unit Dimensions

EVO charging unit:

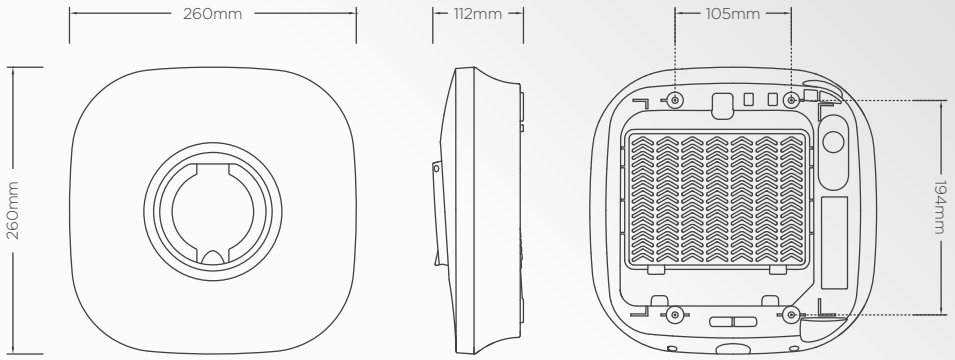

Mounting plate:

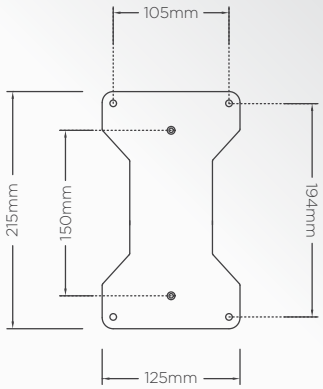

Mounting post:

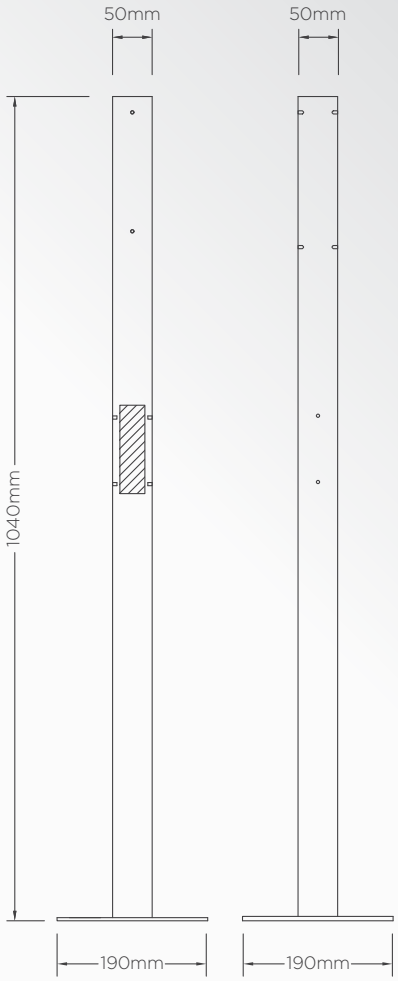

Ground mounting base for mounting post:

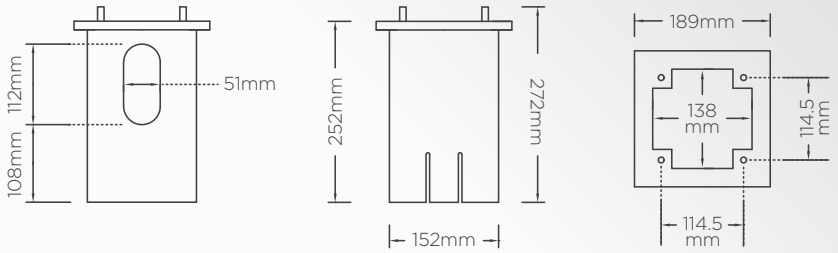

Type 2 plug & cable holster & mounting plate for post:

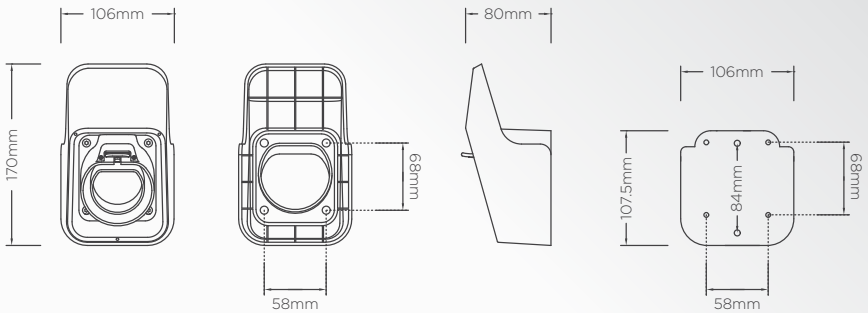

Specifications

Technical Data

User Interface	• Mobile app • NFC/RFID reader (MIFARE ISO/IEC 14443 A) • Plug & go • Solar modes – ECO+ (solar surplus only), ECO (solar & grid) • RGB LED status indicator halo
Charge Protocol	Mode 3 (IEC 61851-1)
Charging Current	6-32A (adjustable)
Built-in Protection	• Residual current protection – AC 30mA Type A & DC 6mA (with test button) • Lightning surge, over temperature protection • PME fault detection – No earth electrode/rod required (Selectable on installation of 22kW model) • Supports automatic dynamic load balancing
Required External Protection	• Over current protection – A suitably rated MCB or 30mA Type A RCBO is to be installed at source (dependent on cable type and/or route) • Surge Protection – May be required depending on the installation
Cable Terminals	• Single Phase – 3x 50mm 1P + N + E • Three Phase – 6x 50mm E + N + 3P + PE

Communications	• 4G LTE Cat-1 (Three Phase model only – built-in nano SIM, subscription required)
	  • LTE FDD: B1/B3/B5/B7/B8/B20/B28
	  • GSM: B2/B3/B5/B8
	• Wi-Fi 6 802.11b/g/n/ax (2.4GHz)
	• RFID ISO/IEC 14443 A (Type A, 13.56MHz)
	• RJ45 Ethernet connection
	• Bluetooth Low Energy (BLE 5.0) 2402-2480 MHz (for installer configuration purposes)
	• OCPP 1.6J

Energy Metering	> 98% Accuracy
Standby Power Consumption	< 5W
Dimensions	260mm x 260mm x 112mm (W x H x D)
Weight	< 3kg
Environmental	• Ingress protection – IP54 • Impact protection – IK10 • Security – Tamper and breach notifications • Operating temperature – -30°C to +50°C • Storage temperature – -40°C to +85°C • Operating humidity – 5% to 95%
Materials	• Unit – PC/ABS Alloy, flammability rating UL94-V0 • Heat Sink – Aluminium alloy
Unit Colour	Daytona Grey Other colours available upon request
Certifications & Compliances	• EV Charging compliance – EN IEC 61851-1:2019, EN IEC 61851-21-2:2021 • Smart Charge Points – SI 2021/1467 • Wire Regulations – BS 7671:2018+A2:2022 • EMC Compliance – EN 301 489-1 V2.2.3, EN 301 489-3 V2.3.2, Draft EN 301 489-17 V3.2.5, EN 301 489-52 V1.2.1 • Safety Compliance – EN IEC 62368-1:2020 + A11:2020, EN IEC 62311:2020, EN 62479:2010 • Communications /RED – EN 300 328 V2.2.2, EN 301 908-1 V15.2.1, EN 301 908-13 V13.2.1, EN 301 511 V12.5.1, EN 300 330 V2.1.1 • Environmental Protection – BS EN 60529:1992+A2:2013 • Impact Rating – BS EN62262:2002+A1:2021 • RoHS – 2011/65/EU as amended by (EU) 2015/863, IEC 63000:2018 • REACH – 1907/2006 • Certificate Markings – CE (*22kW model only) & UKCA • Third party certifications – TÜV, WEEE
Warranty	5 years

Options & accessories

Product Code	Item Description
EVFP0035	Mounting post (fits up to 2 units | conforms with PAS 1899)
GMCP0010	Ground mounting base for mounting post
EVFP0120	EVO plate for mounting post
EVRS0030	Type 2 plug & cable wall or post mount holster
EVFP0080	Type 2 plug & cable holster plate for mounting post
EVPP0100	5m 32A Type 2 to Type 2 charging cable
EVPP0107	10m 32A Type 2 to Type 2 charging cable
EVPP0105	5m 32A Three Phase Type 2 to Type 2 charging cable
EVPP0108	10m 32A Three Phase Type 2 to Type 2 charging cable
	(Other cables are available, including Type 1 options)
EVIN0010	20A Single Phase EV consumer unit with Type A RCBO
EVIN0015	40A Single Phase EV consumer unit with Type A RCBO
EVIN0070	20A Three Phase EV consumer unit with Type A RCBO
EVIN0075	40A Three Phase EV consumer unit with Type A RCBO
ACSR5010	EVO Single Phase CT Clamp & 10m cable
ACSR5011	EVO Single Phase Solar CT Clamp Kit
ACSR5013	EVO Three Phase Load Balancing CT Clamp Kit
ACSR5014	EVO Three Phase Solar & Load Balancing CT Clamp Kit

EVFP0035

EVFP0120

GMCP0010

EVRS0030

EVPP0100

ACSR5010

ACSR5011

ACSR5013

ACSR5014

Branding & colour options available

ROLEC offer a bespoke chargepoint branding service; including logos & brand colours. This can be arranged at time of order. Contact ROLEC for details.

Colour options are subject to minimum order quantities and extended lead times

Brand names, logos and trademarks used herein remain the property of their respective owners. This listing of any firm or their logos is not intended to imply any endorsement or direct affiliation with Rolec Services Ltd. and is purely to demonstrate branding opportunities.

Chargepoint operation

ROLEC EVO mobile app & RFID

The EVO app gives users full control of their charger including the ability to set charging schedules and integrate with smart tariffs to save on off-peak rates.

Enjoy a seamless charging experience via mobile app, or RFID card ensuring your EV will be ready for your next electrified adventure.

- **3 charging modes:** CHARGE NOW, ECO (solar + grid), ECO+ (solar only)
- **Surplus solar compatible**
- **Schedule charging**
- **RFID activation**
- **View charging state**
- **Multi user access**
- **Usage analytics**
- **Fault notifications**
- **Security log & alerts**

DOWNLOAD THE FREE
ROLEC EVO MOBILE APP

GET IT ON Google Play

Download on the App Store

THIS DOCUMENT CONTAINS INFORMATION THAT IS SUBJECT TO CHANGE WITHOUT NOTICE.

The latest version of this publication can be downloaded at www.rolecserv.com/downloads-ev-charging

Illustrations of the product and user interface are for marketing purposes only.

Brand names, logos and trademarks used herein remain the property of their respective owners.
This listing of any firm or their logos is not intended to imply any endorsement or direct affiliation
with Rolec Services Ltd. and is purely to demonstrate branding opportunities.

© 2025 by Rolec Services Ltd. All rights reserved.

EVED-V01-R1 EVO Data Sheet

UK
Manufacturer

ROLEC

t: 01205 724754
e: enquiries@rolecserv.co.uk

www.rolecserv.com