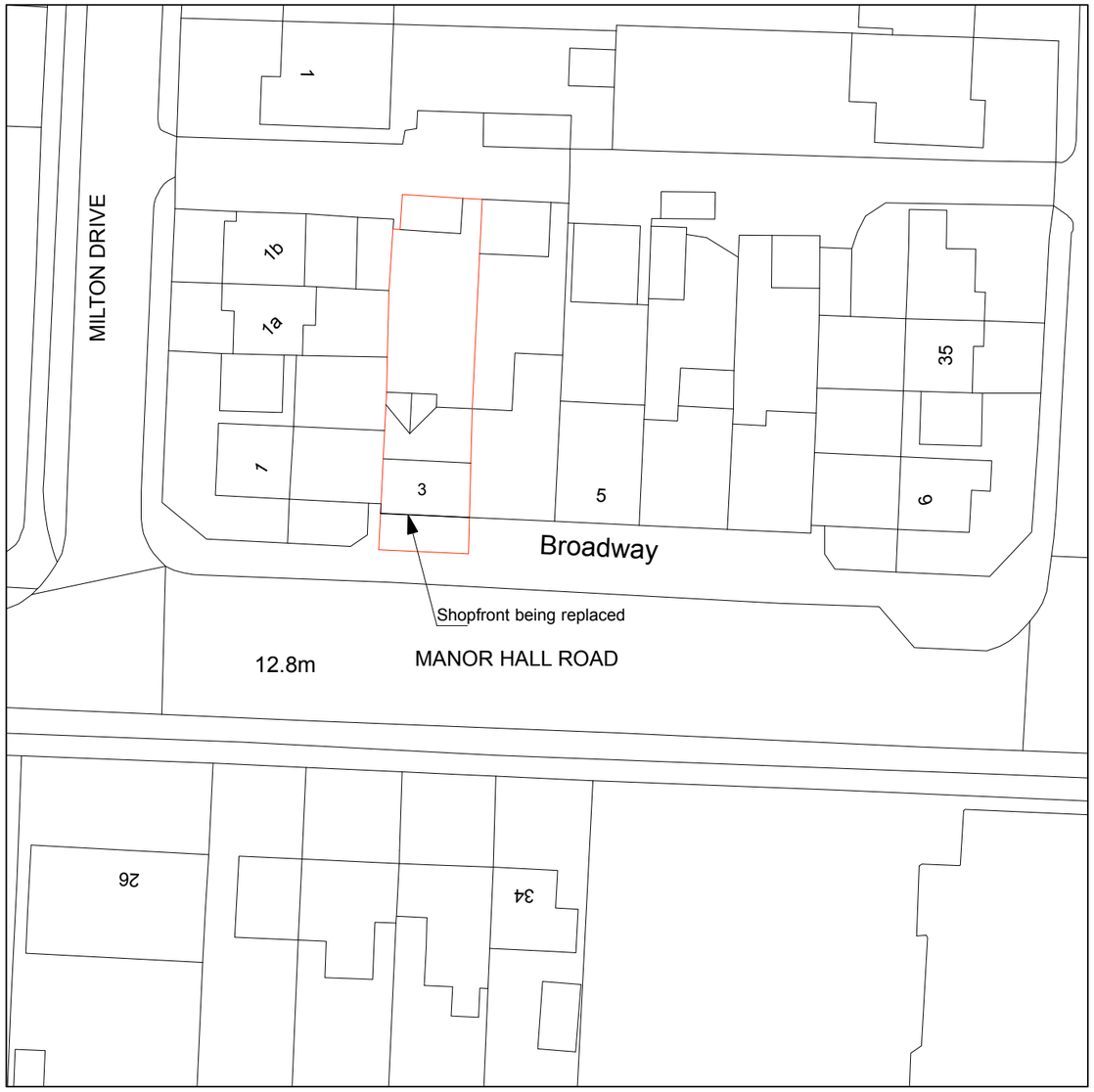

N

scale 1:500

0 10M 20M 30M

SCALE BAR A3 DRAWING SIZE

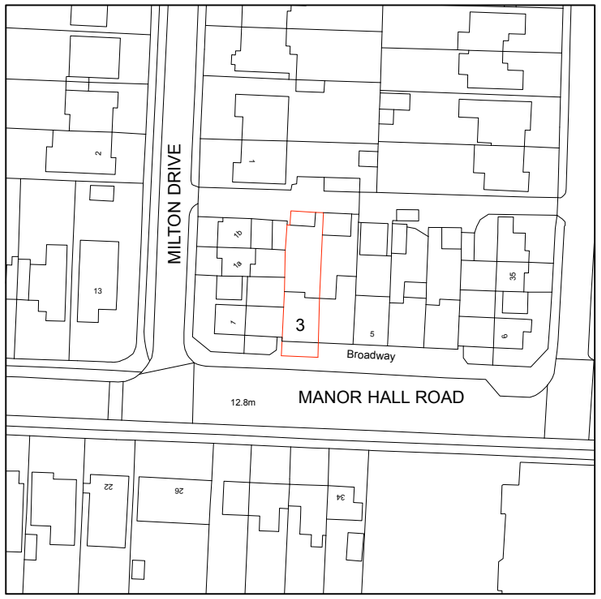

scale 1:1250

0 10M 20M 30M 40M 50M

SCALE BAR A3 DRAWING SIZE

N

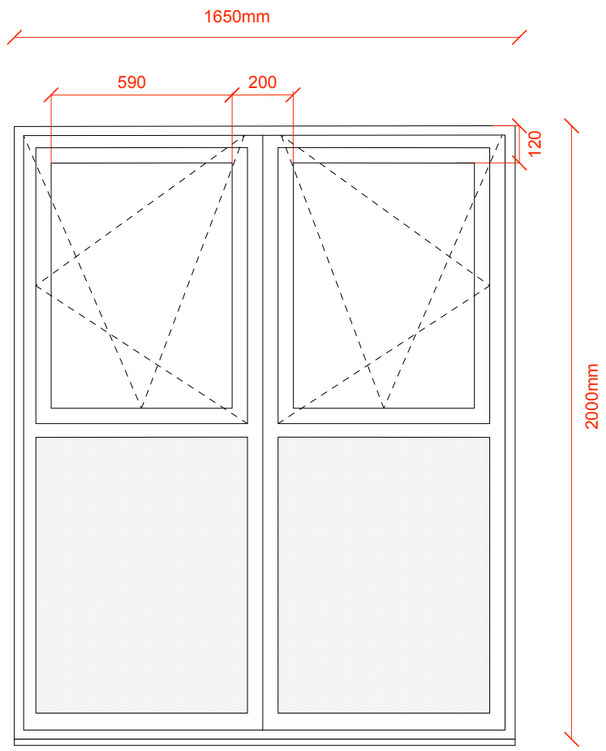

FRONT WINDOW DIMENSIONS- two identical pairs tilt and turn inward opening, fixed lower pane with obscured glazing

scale 1:20

. The contractor is to check all dimensions, levels and conditions on site and advise of any discrepancies prior to the commencement of any work on site. All work is to be carried out in strict accordance with the relevant, current British Standards and codes of practice. Materials and components are to be fixed in strict accordance with the manufacturers instructions and recommendations and relevant body
This drawing is for planning/building control purposes only.
All relevant clauses of the **N**ational **B**uilding **S**pecifcation to apply to all works.
Data Protection Act - no project drawings or client details will be issued by us to anyone other than the client, unless given written instruction by the client for distribution.
Party Wall Details - to be dealt with by a Part Wall Surveyor to be appointed by Client.
Contractor to comply with all Health and Safety Issues and to employ competent personnel.
Client to employ a Principal Designer in accordance with the latest CDM regulations and to ensure all permissions are in place prior to commencement of the works

amendment

A Feb 23 road names added and window dimensions at 1:20. Scale note removed

B Apr 23 window details amended

3 THE BROADWAY, SOUTHWICK

Client: S.ELSOM

Description: LOCATION AND BLOCK PLANS
WINDOW DIMENSIONS 1:20

SUSAN ELSOM architect
BA(HONS) DIP ARCH(HONS) ARB

Date	Scale	Job No.	Drawing No.	Revision
FEB. 23	1:500/1250	2310	01	B

1 Westbourne Grove, Westbourne Gardens, Hove, East Sussex. T: 07443 617573 E: sue.elsom@gmail.com

This drawing is copyright