ULTRA VENT AND GRILLE

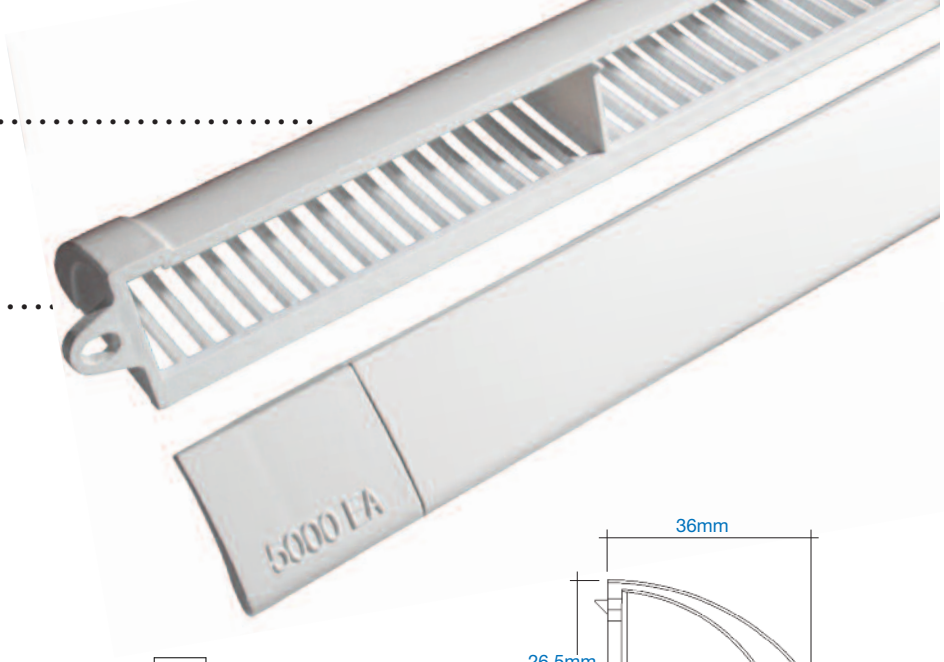

Through frame window ventilator available in three sizes, comprising controllable internal ventilator and matching external canopy grille. Controlled flow of fresh air via two stage opening. External canopy grille provides weather protection and insect ingress grille.

Features

- Three sizes available providing 2500mm², 4000mm² and 5000mm² equivalent areas.
- Can be used to meet background ventilation requirements of Building Regulations throughout the UK and Ireland.
- One of the smallest window ventilators on the market providing up to 5000mm² equivalent area.
- Slim profile of 10mm for the vent.
- Suitable for a range of slot sizes from 13mm to 17mm.
- Incoming air is directed upwards to avoid draughts and discomfort.
- Suitable for PVCu, aluminium and timber windows.
- Meets requirements of BS 6375-1 for resistance to water penetration.

Material

Internal vent: Polyester powder coated aluminium with polymer end caps.
External grille: Injection moulded polymer with integral fly screen and fixing holes.

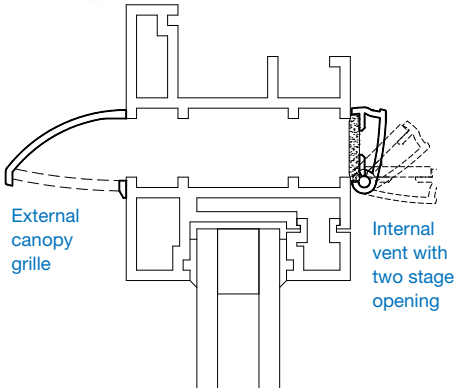

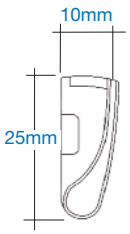

Colour

Bright White RAL 9016 as standard with alternative colours available upon request.

Air permeability

Ultra Vent 5000 achieves 0.25m³/hr at 50Pa in the closed position when tested to BS EN 1026: 2000.

Water tightness

Ultra Vent 5000 achieves 1000Pa pressure with no leakage in the closed position when tested to BS EN 1027: 2000.

Specification clause
Provide background ventilation to meet Building Regulations by means of window ventilators giving a minimum of *2500/4000/5000mm² of equivalent free area of ventilation (Glidevale Ultra Vent TVUV *25/4/5 and Glidevale Ultra Grille TVUG *25/5).
Ventilators to provide upward directional airflow and to meet worst case requirements of BS 6375-1 for resistance to water penetration.
Ventilators available from Glidevale,
2 Brooklands Road, Sale,
Cheshire M33 3SS,
Tel: 0161 905 5700.
Fax: 0161 905 2085.
Email: info@glidevale.com.

*delete as required

Performance and dimensions

Equivalent area

Product	Ventilation equivalent area	Geometric free area	Slot size required (height x width)	Dimensions (length x height x width) Internal vent	External canopy grille
Ultra Vent 2500	2500mm²	2742mm²	1no x 13-17 x 165mm	235 x 25 x 10mm (TVUV25)	203 x 26.5 x 36mm (TVUG25)
Ultra Vent 4000	4000mm²	4465mm²	2no x 13-17 x 135mm	350 x 25 x 10mm (TVUV4)	373 x 26.5 x 36mm (TVUG5)
Ultra Vent 5000	5000mm²	5400mm²	2no x 13-17 x 162.5mm	405 x 25 x 10mm (TVUV5)	373 x 26.5 x 36mm (TVUG5)

ENERGY SAVER, HUMIDITY SENSITIVE

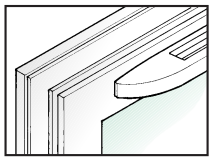

Installed in window frame

Automatic function dependent upon humidity levels in the room. Can be used to meet background ventilation requirements of Building Regulations throughout the UK and Republic of Ireland. Minimises unnecessary ingress of cold air. No user input is required, and can help to reduce potential for condensation. Designed for use with Ultra Grille (TVUG5) external canopy grille (see page 3).

Features

- Automatic, no user input.
- Uses no electricity or mechanical power.
- Directs airflow upwards avoiding draughts and discomfort.
- Energy efficient, minimises heat loss.

Material

Body: Injection moulded polystyrene.
Colour: white, brown or black as standard.
Other RAL colours to order.
Contact us for pricing.

Technical

Airflow at 20Pa: minimum 7m³/hr (closed to trickle), max 40m³/hr.
Ventilation levels
47% RH - 500mm² ventilation area
65% RH - 3815mm² ventilation area

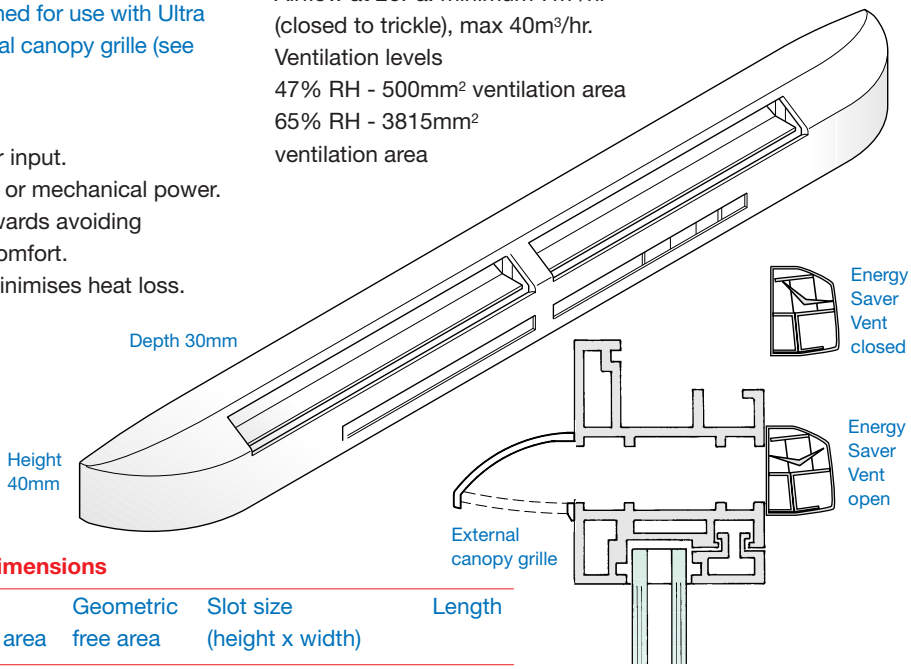

Performance and dimensions

Product	Ventilation equivalent area	Geometric free area	Slot size (height x width)	Length
TVES4	3815mm²	4000mm²	2no x 13 x 162.5mm	400mm

Specification clause
Select options required, and insert information where necessary. Provide background ventilation complying with Building Regulations by means of automatic humidity-controlled internal window ventilators and external grilles giving 3815mm² equivalent area of ventilation. Internal vent (Glidevale Energy Saver Vent TVES4) to operate between 47% and 65% relative humidity. Ventilators to meet or exceed the worst case requirements of BS 6375-1 for resistance to water penetration in conjunction with specified external grille (Glidevale TVUG5).

Ventilators and information available from Glidevale,
2 Brooklands Road, Sale,
Cheshire M33 3SS,
Tel: 0161 905 5700.
Fax: 0161 905 2085.
Email: info@glidevale.com.

ACOUSTIC ENERGY SAVER, HUMIDITY SENSITIVE

Humidity sensitive, acoustic through frame window vent. Provides automatic ventilation and sound insulation for use near noise sources. Designed for use with Ultra Grille (TVUG5) external canopy grille (see page 3).

Features

- Energy saving, reduces over ventilating.
- Substantial sound reduction.
- No user input required to control.
- No mechanical or electrical components.

Material

Body: Injection moulded polystyrene.
Colour: White, brown or black.
Colour matched to RAL available.
Contact us for pricing.

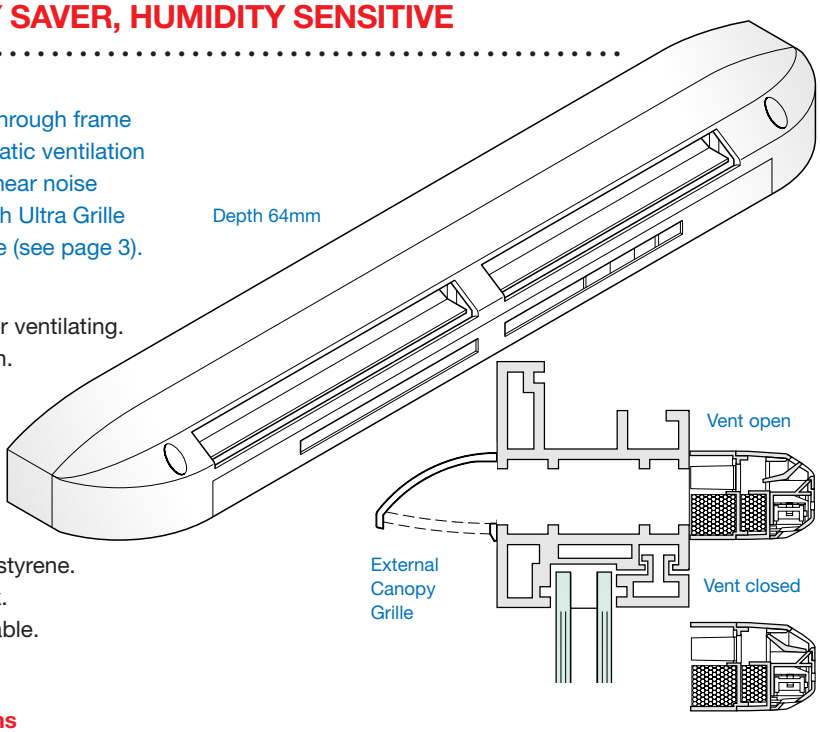

Performance and dimensions

Product	Ventilation equivalent area	Geometric free area	Slot size (height x width)	Length	Sound reduction up to
TVES4dB	3815mm²	4000mm²	2no x 13 x 162.5mm	420mm	39dB Dn,e,w

Specification clause
Select options required, and insert information where necessary. Provide background ventilation complying with Building Regulations by means of automatic humidity-controlled internal window ventilators and external grilles giving 3815mm² equivalent area of ventilation. Internal vent (Glidevale Energy Saver Vent TVES4dB) to operate between 47% and 65% relative humidity. Vent to be acoustically treated providing attenuation up to 39dB Dn,e,w. Ventilators to meet or exceed the worst case requirements of BS 6375-1 for resistance to water penetration in conjunction with specified external grille (Glidevale TVUG5).

Ventilators and information available from Glidevale,
2 Brooklands Road, Sale,
Cheshire M33 3SS,
Tel: 0161 905 5700.
Fax: 0161 905 2085.
Email: info@glidevale.com.

ACOUSTIC LOW PROFILE

Acoustic through frame window vent. Low profile design with manual operation. Available in either 450mm or 800mm widths and provides up to 42dB attenuation.
Designed for use with Ultra Grille (TVUG5) external canopy grille (see page 3).

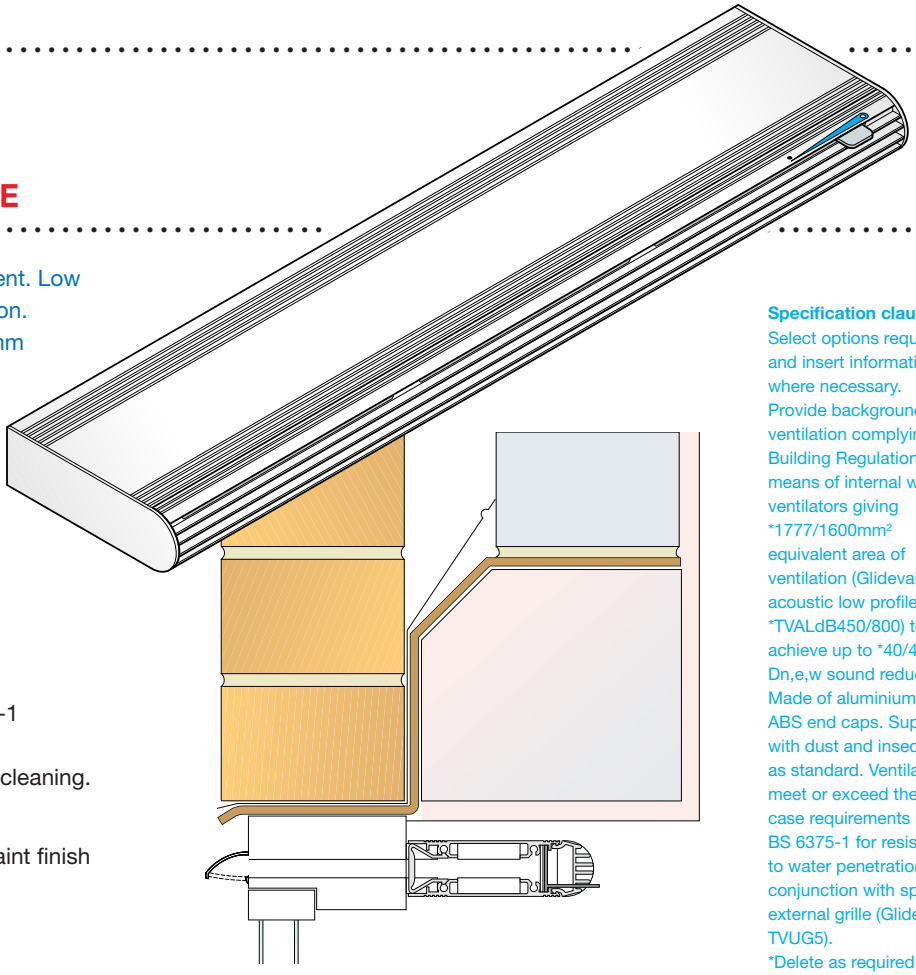

Features

- Substantial sound reduction.
- Internal filter prevents insect and dust ingress.
- Simple and easy operation.
- Meets requirements of BS 6375-1 for resistance to water.
- Internal vent easily removed for cleaning.

Material

Body: Aluminium with polyester paint finish
Colour: White or grey.
Colour matched to RAL available.
Contact us for pricing.

Specification clause
Select options required, and insert information where necessary. Provide background ventilation complying with Building Regulations by means of internal window ventilators giving *1777/1600mm² equivalent area of ventilation (Glidevale acoustic low profile vent *TVALdB450/800) to achieve up to *40/42dB Dn,e,w sound reduction. Made of aluminium with ABS end caps. Supplied with dust and insect filter as standard. Ventilators to meet or exceed the worst case requirements of BS 6375-1 for resistance to water penetration in conjunction with specified external grille (Glidevale TVUG5).
*Delete as required

To be supplied by Glidevale,
2 Brooklands Road, Sale,
Cheshire M33 3SS,
Tel: 0161 905 5700.
Fax: 0161 905 2085.
Email: info@glidevale.com.

Performance and dimensions

Product	Ventilation equivalent area	Geometric free area	Slot size required (height x width)	Length	Sound reduction up to
TVALdB450	1777mm²	4400mm²	1no x 13 x 350mm	456mm	40dB Dn,e,w
TVALdB800	1600mm²	4400mm²	1no x 13 x 350mm	806mm	42dB Dn,e,w

RELATED PRODUCTS

The Glidevale range of tricklevents can be used as part of a whole-house strategy using our intelligent Passive Stack Ventilation (*i*PSV) system, which requires no energy to use and has no moving parts.

Glidevale also offers a range of Fresh through wall ventilators which can provide the stated levels of background ventilation to meet the requirements of Building Regulations. They are available with various manual control mechanisms or automatic openings (humidity-sensitive). Acoustic options are also provided.



FURTHER INFORMATION

Environment / operational information

As part of our commitment to minimising our impact on the environment, and to continuous improvement in our methods of operation, Glidevale is accredited to ISO 14001 Environmental Management, OHSAS 18001 Health and Safety Management and ISO 9001 Quality Management Systems.

Technical support

Glidevale offer a full technical advisory and estimating service. Contact our Technical Services department on 0161 905 5700 for further information or to request a complete schedule and quotation covering all products required.

Other products from Glidevale

Cavity trays and preformed DPCs.

Ground floor gas and damp protection products.

Tile and slate ventilators.

Abutment ventilation.

Loft access hatches / ladder.

Eaves and low level ventilation systems.

*i*PSV® whole-house ventilation system.



Stockist's stamp

GLIDEVALE
2 Brooklands Road, Sale, Cheshire M33 3SS
Tel: 0161 905 5700 Fax: 0161 905 2085
Email: info@glidevale.com Web: www.glidevale.com

Glidevale maintains a policy of continuous development and reserves the right to amend product specifications without notice.

BPD
A division of Building Product Design Ltd. Company Registration No; 3944123

ISO 9001 ISO 14001 OHSAS 18001

910140 December 2017 4670