DO NOT SCALE EXCEPT FOR PLANNING AND BUILDING REGULATION PURPOSES

REV	DESCRIPTION	DATE	NAME

REVISIONS

DRAWN	REF/DRG NO.	DATE	SCALE	SHEET
PR	558	21/11/06	1:50	1

SITE ADDRESS: MARTIN'S 7 - 9 STRAND PARADE, GORING BY THE SEA, SUSSEX, BN12 6DT

REV

CLIENT: bankmachine

TITLE: INSTALLATION OF AN AUTOMATED TELLER MACHINE (ATM)

Complete Technical Services Ltd.
ATM Installations
Project Management

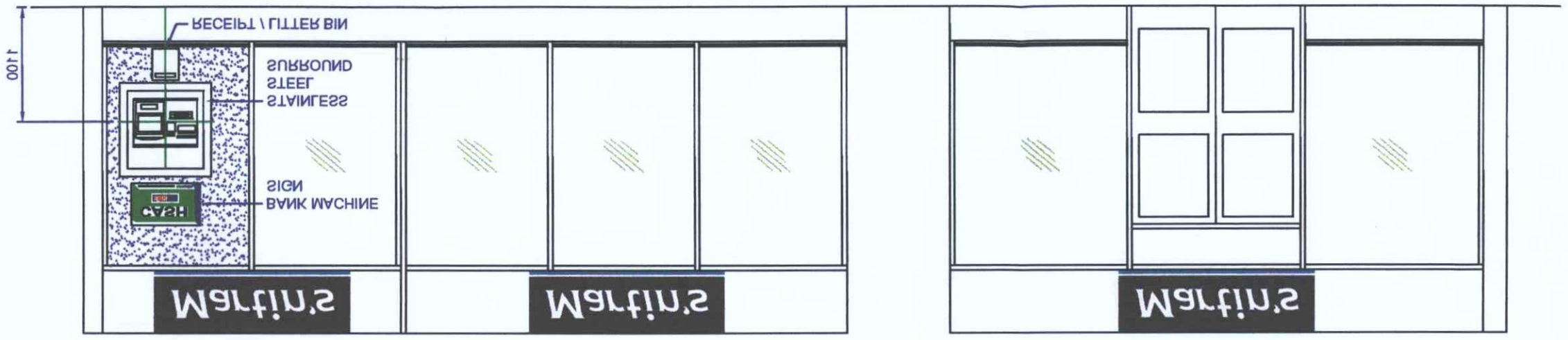

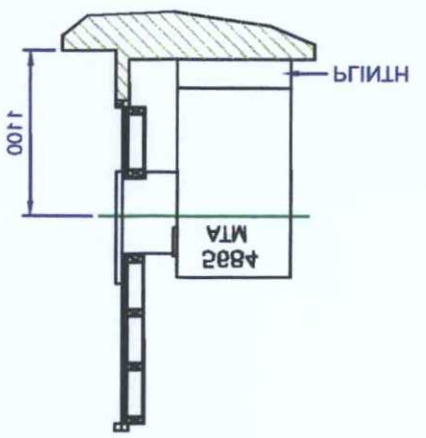

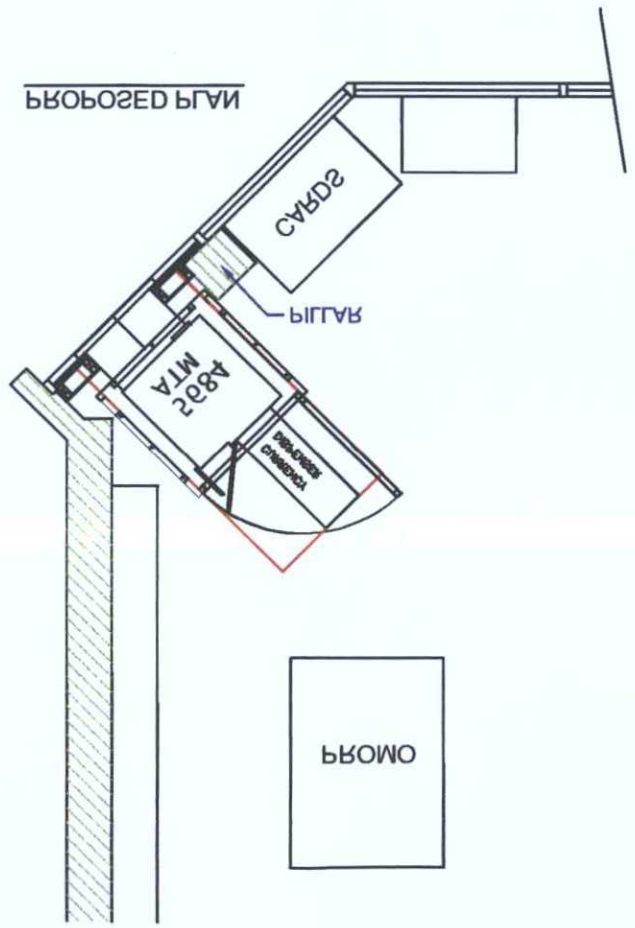

NOTES:
REMOVE EXISTING GLAZING PANEL,
INSTALL LAMINATE PANEL & SECURITY STUDWORK
PLINTH, ATM, CTS SECURITY ENCLOSURE TO BE INSTALLED

SUBJECT TO CONDITIONS
CONSENT GRANTED
- 7 JAN 2008
WORTHING BOROUGH COUNCIL

WB/ 01/11/06
TP. REF. NO.
DEPOSITED 15.11.01
BOROUGH OF WORTHING

T.P. OFFICE COPY

PROPOSED ATM INSTALLATION FOR BANK MACHINE