ADUR & WORTHING
PLANNING SERVICES

| | |
|---|---|
| PLAN | AWDM/ 1510/17 |
| DATE VALID | - 3 OCT 2017 |


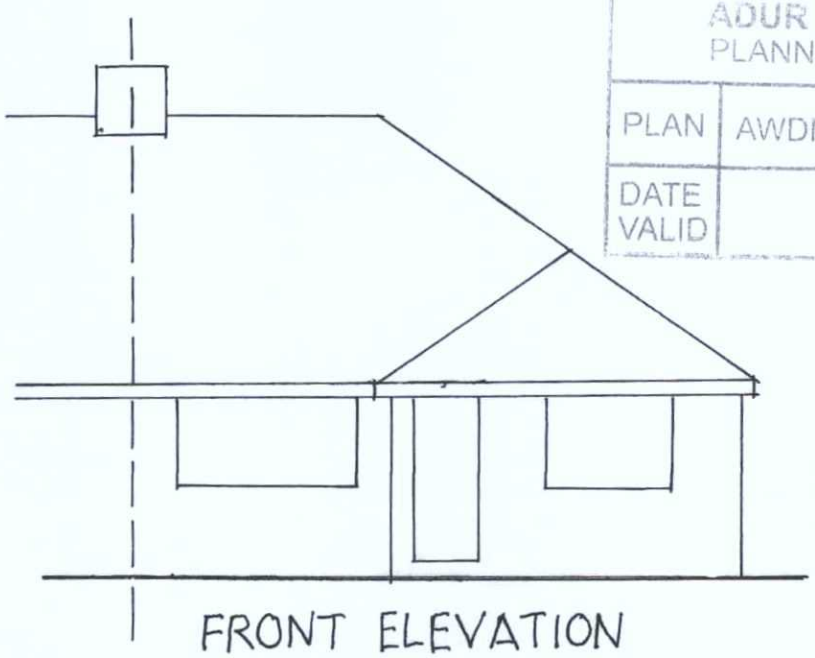

FRONT ELEVATION
AS EXISTING

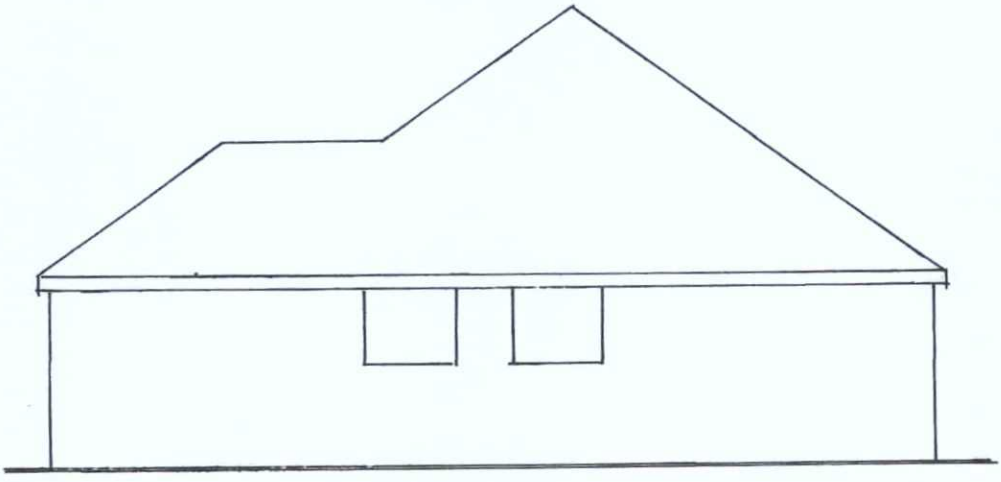

Scale 1:100

SIDE ELEVATION (S)
AS EXISTING

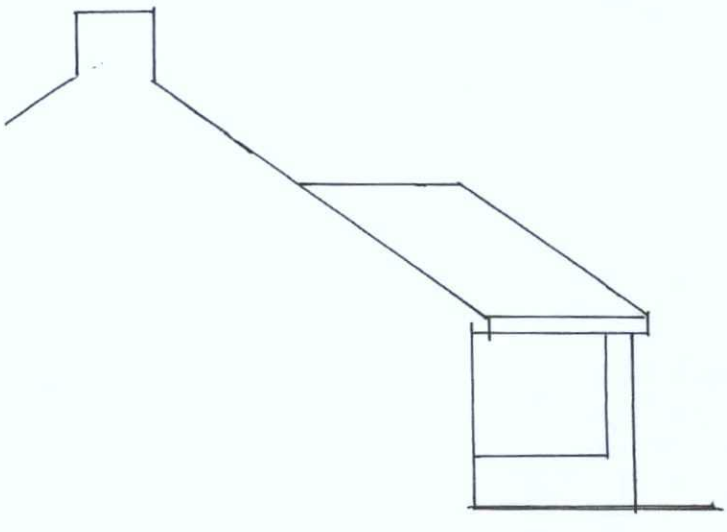

SIDE ELEVATION (N)
AS EXISTING