Project: Durrington High School
Unit name: 1 - AHU-01 - AHU-01 - Design data

Date: 05/07/2023
33 / 1.0.20230621.1110757
Unit ID: AD-10001474369

GOLD F RX
Manufactured by Swegon, Kvänum, Sweden

Dimensioning data	1 - AHU-01		
Unit size		050	
Air density		1.200	kg/m³
Supply air flow		4.150	m³/s
Static pressure drop	Outdoor air duct	0	Pa
	Supply air duct	200	Pa
Extract air flow		4.150	m³/s
Static pressure drop	Extract air duct	200	Pa
	Exhaust air duct	0	Pa
Climate data		London Weather C.,	Great Britain
Weather station, reference		LONDON CITY,	Great Britain
Design outdoor temperature, summer		30.0	°C
Design outdoor humidity, summer		53	%
Design outdoor temperature, winter		-5.0	°C
Design outdoor humidity, winter		95	%
Supply air temperature, summer		23.0	°C
Supply air temperature, winter		17.6	°C

Key Performance Data			
Specific fan power SFPv	With clean filter and including effect of OACF & EATR	1.54	kW/(m³/s)
Dry temperature efficiency of supply air, winter		81.1	%
Eurovent Energy Efficiency Class	Summer: A+ ↳ 2020	Winter: A+	2016
Eurovent; Fs_Pref:	Summer: 0.93	Winter:	0.93
ErP Commission Regulation (EU) No 1253/2014		Compliant	2018

Casing	
Construction	Frameless, double skinned panels with mineral wool insulation
Panels	52mm thick with 1mm thick steel sheet inside and out. Outer sheet with grey painted finish
Thermal insulation class	T2
Thermal bridging class	TB2
Casing leakage class	L1(M) / L2(R) according to EN 1886:2007 at -400 Pa and +700 Pa
Casing strength	D1(M)
Hygiene	Compliant with the requirements of VDI 6022

Electrical connections	
GOLD F RX	3-phase, 5-wire, 400 V-10/+15%, 50 Hz, 25 A

Functional sections viewed in the direction of air flow	Velocity m/s	Air Temperature in/out Winter °C	Air Temperature in/out Summer °C	Cooling power, summer kW	Design Pressure drop Pa	Noise Level dB(A)
Outdoor air duct					-0	72
Damper					-1	
Connection frame					-1	
Filter	1.65				-112	
Rotary heat exchanger	2.59	-5.0/16.9	30.0/25.9		-164	
Fan				3.820	567	
Connection frame					-1	
Cooling coil, direct expansion	2.31	/	26.6/23.0	21.34	-89	
Supply air duct					-200	83
Extract air duct					-200	73
Connection frame					-1	
Filter	1.57				-59	
Rotary heat exchanger	2.70	22.0/-0.4	25.0/29.1		-173	
Extra pressure drop					-0	
Fan				3.170	433	
Connection frame					-1	
Damper					-1	
Exhaust air duct					-0	86

Sound power to duct, measured according to ISO 5136
Noise reduction for function section included to duct.
Sound power emitted to surroundings, measured according to ISO 3741

Frequency band	63	125	250	500	1k	2k	4k	8k		All	
To supply air duct	83	78	79	80	77	76	74	74	dB	83	dB(A)
To outdoor air duct	79	78	78	67	59	56	52	55	dB	72	dB(A)
To extract air duct	79	78	79	67	59	57	56	59	dB	73	dB(A)
To exhaust air duct	84	79	81	83	80	79	77	77	dB	86	dB(A)
To surroundings	76	68	61	65	50	49	46	49	dB	64	dB(A)

GOLD-Unit with control system

Components are arranged according to airflow direction

Quantity	Supply air		
1	**Damper, TBSA-4-180-100-1-1**		
	Damper motor: With spring return		
	Damper blade: Uninsulated		
	Static pressure drop	1	Pa
1	**Connection frame , outdoor air**		
	Static pressure drop	1	Pa
1	**Filter**		
	Filter class ePM1 50% (F7)		
	6x(592x592x520-10)		
	Velocity in the filter section	1.65	m/s
	Recommended design pressure drop	112	Pa
	Initial pressure drop	62	Pa
	Final pressure drop	162	Pa
1	**Rotary heat exchanger, GOLD050FRXP01**		
	Rotary heat exchanger of type RECOnomic STE		
	Standard aluminium		
	Speed controlled		
	Pressure drop, supply air	164	Pa
	Pressure drop, extract air	173	Pa
	Extra pressure drop in extract air side (damper) to ensure the right flow direction	0	Pa
	Purging flow including leakage	0.210	m^3/s
	Outdoor Air Correction Factor, OACF	1.05	
	Exhaust Air Transfer Ratio, EATR	0.5	%
	Dry temperature efficiency of supply air, winter (81.1% at the same airflow)	81.1	%
	Dry temperature efficiency of supply air, summer	81.1	%
	Humidity efficiency, supply air, winter	5.3	%
	Humidity efficiency, supply air, summer	0.0	%

Annual energy efficiency, dry conditions 97.4 %

Supply air side, winter	In	Out	
Air temperature	-5.0	16.9	°C
Relative humidity	95	21	%
Heating power		109.72	kW

Extract air side, winter	In	Out	
Air temperature	22.0	-0.4	°C
Relative humidity	20	88	%

Supply air side, summer	In	Out	
Air temperature	30.0	25.9	°C
Relative humidity	53	68	%
Cooling power		21.35	kW

Extract air side, summer	In	Out	
Air temperature	25.0	29.1	°C
Relative humidity	50	39	%

1 Fan

Fan of type GOLD Wing+	Fan size: 50	
Withdrawable fan with integrated airflow measurement		
Direct drive with speed controlled EC motor. Efficiency class corresponding to IE5		
Isolated with internal flexible connection and rubber anti-vibration mounting		
Standard connection, internal		
Supply air flow	4.150	m³/s
The fan system effect is included in the fan performances		
Design static pressure (wet conditions)	567	Pa
Static pressure rise in the SFPv calculation	501	Pa
Temperature rise caused by the fan	0.8	°C
Min speed	200	rpm
Speed in the SFPv calculation	1,105	rpm
Design speed	1,142	rpm
Max speed	1,380	rpm
Design electric power to motor(s)	3.820	kW
Electric power to motor(s) in the SFPv calculation	3.390	kW
Rated motor power/motor	6.500	kW
Motor option	1	
Motor code	DOMEL 749.3.694	
Number of fans/motors in the air stream	1	
Overall static efficiency drive	61.6	%
Maximum motor efficiency (incl. motor control 92.5%)	95.5	%
Efficiency grade; FMEG, plenum fan, incl. motor control	70.00	

Regulation(EU)No 327/2011 overall efficiency	69.2	%
Specific fan power efficiency	0.82	kW/(m³/s)

1 **Connection frame , supply air**

Static pressure drop	1	Pa

1 **Cooling coil, direct expansion, TBKC-3-180-100-1-1-1**

Capacity variant	1	
No.of tube rows	4	
Quantity of sections	1	
Fin spacing	2.5	mm
Pressure drop, dry	73	Pa
Pressure drop, wet	89	Pa
Air velocity	2.31	m/s

	In	Out	
Air temperature	26.6	23.0	°C
Relative humidity	65	79	%

Sensible coil capacity	18.08	kW
Required total coil capacity	21.34	kW
Excess capacity of the coil	322	%
Amount of drained water	0.065	l/min
Refrigerant	R410a	
Evaporation temperature (dew point)	6.0	°C
Liquid volume of the coil	23	l

Quantity	Product	Article name
1	Drain trap	TBXZ-1-40-3

Quantity — Extract air

1 **Connection frame , extract air**

Static pressure drop	1	Pa

1 **Filter**

Filter class ePM10 60% (M5)

6x(592x592x520-10)

Velocity in the filter section	1.57	m/s
Recommended design pressure drop	59	Pa
Initial pressure drop	29	Pa
Final pressure drop	88	Pa

1 Rotary heat exchanger, GOLD050FRXP01

Accessories and technical data, see supply air

1 Fan

Fan of type GOLD Wing+	Fan size: 50	
Withdrawable fan with integrated airflow measurement		
Direct drive with speed controlled EC motor. Efficiency class corresponding to IE5		
Isolated with internal flexible connection and rubber anti-vibration mounting		
Standard connection, internal		
Extract air flow	4.150	m³/s
The fan system effect is included in the fan performances		
Design static pressure (wet conditions)	433	Pa
Static pressure rise in the SFPv calculation	404	Pa
Temperature rise caused by the fan	0.6	°C
Min speed	200	rpm
Speed in the SFPv calculation	1,080	rpm
Design speed	1,097	rpm
Max speed	1,380	rpm
Design electric power to motor(s)	3.170	kW
Electric power to motor(s) in the SFPv calculation	2.990	kW
Rated motor power/motor	6.500	kW
Motor option	1	
Motor code	DOMEL 749.3.694	
Number of fans/motors in the air stream	1	
Overall static efficiency drive	59.6	%
Maximum motor efficiency (incl. motor control 92.5%)	95.5	%
Efficiency grade; FMEG, plenum fan, incl. motor control	70.00	
Regulation(EU)No 327/2011 overall efficiency	69.2	%
Specific fan power efficiency	0.69	kW/(m³/s)

1 Connection frame , exhaust air

Static pressure drop	1	Pa

1 Damper, TBSA-4-180-100-1-1

Damper motor: With spring return

Damper blade: Uninsulated

Static pressure drop	1	Pa

Quantity	Accessories
1	**IQlogic plus (medium)**

TBIQ3201

1 **Heat pump coil**

Heat Pump Coil - 16kW Heating Duty

1 **Roomsensor, GOLD min/max/mean, Compact standard**

TBLZ1242

GOLD F RX

Unit size	050	
Supply air flow	4.150	m³/s
Pressure drop, supply air	200	Pa
Design electric power to motor(s), Supply air fan	3.820	kW
Extract air flow	4.150	m³/s
Pressure drop, extract air	200	Pa
Design electric power to motor(s), Extract air fan	3.170	kW

Non-residential ventilation unit (exception: multi dwelling residential buildings)
Unit type: bidirectional ventilation unit; NVRU, BVU
Other heat recovery (rotary heat exchanger)
Supply air dry temp. efficiency ratio (Requirement: 2018: 73 %): 81.1 %
Maximum internal leakage (tracer gas) 1 %

ErP Commission Regulation (EU) No 1253/2014
The air handling unit meets the requirements in 2018

Supply air		
Face velocity, filter section	1.65	m/s
Energy perf, 6000 h (filter class ePM1 50% (F7) or better)	4,530	kWh/year
Filter class (ePM1 50% (F7) or better)	F7	
Reference filter; ePM1 50% (F7)	62	Pa
HRS	164	Pa
Casing; inlet	1	Pa
Casing; outlet	1	Pa
Casing; fan system losses	0	Pa
(The fan system effect is included in the fan performances)		
Overall static fan efficiency at the current working point	61.6	%

Extract air		
Face velocity, filter section	1.57	m/s
Energy perf, 6000 h (filter class ePM10 60% (M5) or better)	2,480	kWh/year
Filter class (ePM10 60% (M5) or better)	M5	
Reference filter; ePM10 60% (M5)	29	Pa
HRS	173	Pa
Casing; inlet	1	Pa
Casing; outlet	1	Pa
Casing; fan system losses	0	Pa
(The fan system effect is included in the fan performances)		
Overall static fan efficiency at the current working point	59.6	%

Efficiency bonus E 2018	243	W/(m³/s)
Filter correction F 2018	0	W/(m³/s)
Internal specific fan power, SFPint	713	W/(m³/s)
Internal specific fan power, required 2018, SFPint_limit	1,043	W/(m³/s)

Type of drive: Direct drive with speed controlled EC motor. Efficiency class corresponding to IE5		
Visual filter warning is available in the hand terminal provided		
Sound power emitted to surroundings, measured according to ISO 3741	64	dB(A)
Disassembly instructions: https://www.swegon.com/globalassets/_product-documents/air-handling-units/gold-version-f/general/_multi/recycling_instruction-air-handling-units.pdf		

GOLD F RX
Manufactured by Swegon, Kvänum, Sweden

Dimensioning data	1 - AHU-01		
Unit size		050	
Air density		1.200	kg/m³
Supply air flow		4.150	m³/s
Static pressure drop	Outdoor air duct	0	Pa
	Supply air duct	200	Pa
Extract air flow		4.150	m³/s
Static pressure drop	Extract air duct	200	Pa
	Exhaust air duct	0	Pa
Climate data		London Weather C.,	Great Britain
Weather station, reference		LONDON CITY,	Great Britain
Design outdoor temperature, summer		30.0	°C
Design outdoor humidity, summer		53	%
Design outdoor temperature, winter		-5.0	°C
Design outdoor humidity, winter		95	%
Supply air temperature, summer		23.0	°C
Supply air temperature, winter		17.6	°C

Temperature data, Energy	Design data	
Supply air temperature, summer	20.0	°C
Supply air temperature, winter	20.0	°C
Extract air temperature, summer	25.0	°C
Extract air temperature, winter	22.0	°C
Post heating, outdoor temperature limit	15.0	°C

Operating data	Design data	
Supply air fan	After HEX	
Airflow	4.150	m³/s
Pressure increase	567	Pa
Electric power fan	3.820	kW
Temp. Inc. Fan	0.8	°C
Extract air fan	After HEX	
Airflow	4.150	m³/s
Pressure increase	433	Pa
Electric power fan	3.170	kW
Temp. Inc. Fan	0.6	°C
Heat exchanger	Rotary heat exchanger of type RECOnomic STE	
Dry temperature efficiency of supply air	81.1	%
Cooling recovery	Yes	

Electrical energy	Design data	
Fan motors	61,200	kWh/year
Electric energy, comparison without energy recovery	39,600	kWh/year

Thermal energy	Design data	
With energy recovery	9,840	kWh/year
Without energy recovery	378,000	kWh/year

Cooling energy	Design data	
With energy recovery (total/sensible)	8,220 / 7,860	kWh/year
Without energy recovery (total/sensible)	9,080 / 8,720	kWh/year

Energy prices		
Energy price, Electrical	0.540	GBP/kWh
Energy price, Heat	0.480	GBP/kWh
Energy price, Cooling	0.540	GBP/kWh
Estimated annual price increase, Electrical	2	%
Estimated annual price increase, Heat	2	%
Estimated annual price increase, Cooling	2	%
Period in use	20	year
Calculated interest rate	6	%

Costs		
Electric energy fans	33,100	GBP/year
Heat cost (post heating)	4,720	GBP/year
Cooling cost (post cooling)	4,440	GBP/year
Total cost of energy consumption	42,200	GBP/year

Cost comparison without energy recovery		
Electric energy fans	21,400	GBP/year
Heating Cost	181,000	GBP/year
Cooling cost	4,900	GBP/year
Total energy cost, without energy recovery	208,000	GBP/year

Life cycle energy cost		
Life cycle energy costs, electricity	449,000	GBP
Life cycle energy costs, heating	64,200	GBP
Life cycle energy costs, cooling	60,300	GBP
Total	574,000	GBP

Life cycle energy cost, without energy recovery		
Life cycle energy costs, electricity, without energy recovery	291,000	GBP
Life cycle energy costs, heating, without energy recovery	2,460,000	GBP
Life cycle energy costs, cooling, without energy recovery	66,700	GBP
Total	2,820,000	GBP

Operating hours

Day \ Hour	1	2	3	4	5	6	7	8	9	10	11	12	13	14	15	16	17	18	19	20	21	22	23	24
Monday																								
Tuesday																								
Wednesday																								
Thursday																								
Friday																								
Saturday																								
Sunday																								

Design data
No operation

GOLD, version F

GOLD, sizes 004-060

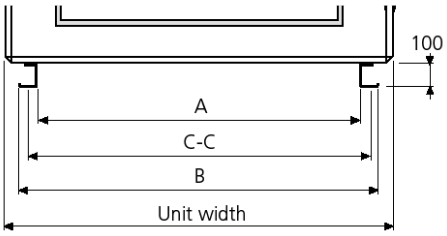

GOLD RX/PX/CX

Size	C-C (mm)	A (mm)	B (mm)	Unit width (mm)	Unit length, incl. end walls (mm)				
					RX	RX Top	PX	PX Top	CX
004/005, common casing*	624	579	669	825	1499	1600	2333	–	–
004/005, split version	624	579	669	825	1799	–	2534	2534	–
007/008, common casing*	794	749	839	995	1619	1720	2503	–	–
007/008, split version	794	749	839	995	1860	–	2811	2811	–
011/012	998	953	1043	1199	1859	2219	2925	3285	–
014/020	1199	1154	1244	1400	2080	2643	3351	3914	–
025/030	1399	1354	1444	1600	2261	2643	3825	4208	–
035/040	1789	1744	1834	1990**	2642	–	4477	–	2977
050/060	2117	2072	2162	2318**	2642	–	–	–	2977

GOLD SD

Size	C-C (mm)	A (mm)	B (mm)	Unit width (mm)	Unit length, incl. end walls (mm)		
					Fan	Fan+filter	Fan+filter+coil
004/005, common casing***	624	579	669	825**	1120	1120	1955
004/005, split version	624	579	669	825**	809	1529	2364
007/008, common casing***	794	749	839	995**	1214	1214	2049
007/008, split version	794	749	839	995**	809	1529	2364
011/012, common casing	998	953	1043	1199**	1404	1404	2239
011/012, split version	998	953	1043	1199**	878	1598	2433
014/020	1199	1154	1244	1400**	1040	1875	2710
025/030	1399	1354	1444	1600**	1144	1978	2813
035/040	1789	1744	1834	1990**	1253	2088	2988
050/060	2117	2072	2162	2318**	1253	2088	2988

** Base beams are optional.*
*** Heat recovery coil section width = Unit width + 200 mm. (CX and SD only)*
**** Base beams are standard if the AHU features heat recovery coil. Base beams are optional if the AHU does not feature heat recovery coil.*

GOLD, version F

GOLD, size 070/080

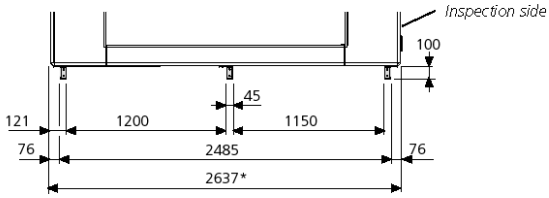

** Heat recovery coil section width = Unit width + 200 mm. (CX and SD only)*

GOLD RX/CX

Size	Unit length, incl. end walls (mm)	
	RX	CX
070/080	3112	3447

GOLD SD

Size	Unit length, incl. end walls (mm)		
	Fan	Fan+filter	Fan+filter+coil
070/080	1325	2547	3447

GOLD, size 100/120

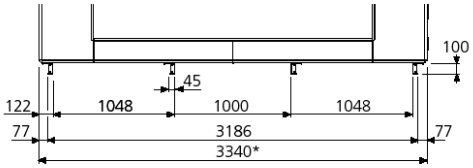

** Heat recovery coil section width = Unit width + 200 mm. (CX and SD only)*

GOLD RX/CX

Size	Unit length, incl. end walls (mm)	
	RX	CX
100/120	3322	3322

GOLD SD

Size	Unit length, incl. end walls (mm)		
	Fan	Fan+filter	Fan+filter+coil
100/120	1681	2752	3322

AHU Design
Sketch: Inspection side

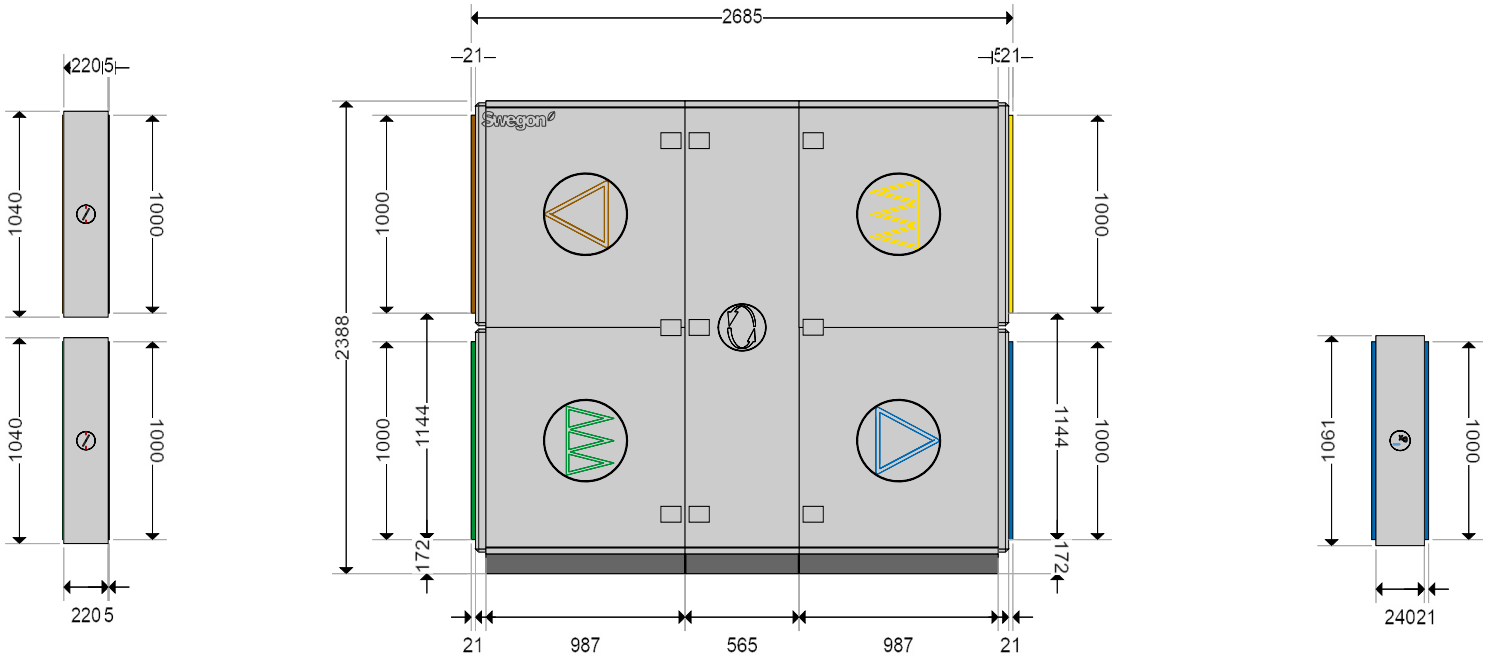

GOLD F RX		
Unit size	050	
Unit weight	1,409	kg
Duct Component Weight	206	kg
Length, max	2,685	mm
Height, max	2,388	mm
Width, max	2,318	mm

Connection size		
outdoor air	1,800 x 1,000	mm
exhaust air	1,800 x 1,000	mm
supply air	1,800 x 1,000	mm
extract air	1,800 x 1,000	mm

Project: Durrington High School
Unit name: 1 - AHU-01 - AHU-01
Unit ID: AD-10001474369
33 / 1.0.20230621.1110757
Date: 05/07/2023

Outdoor air
Supply air
Extract air
Exhaust air

AHU Design
Sketch: Left-hand

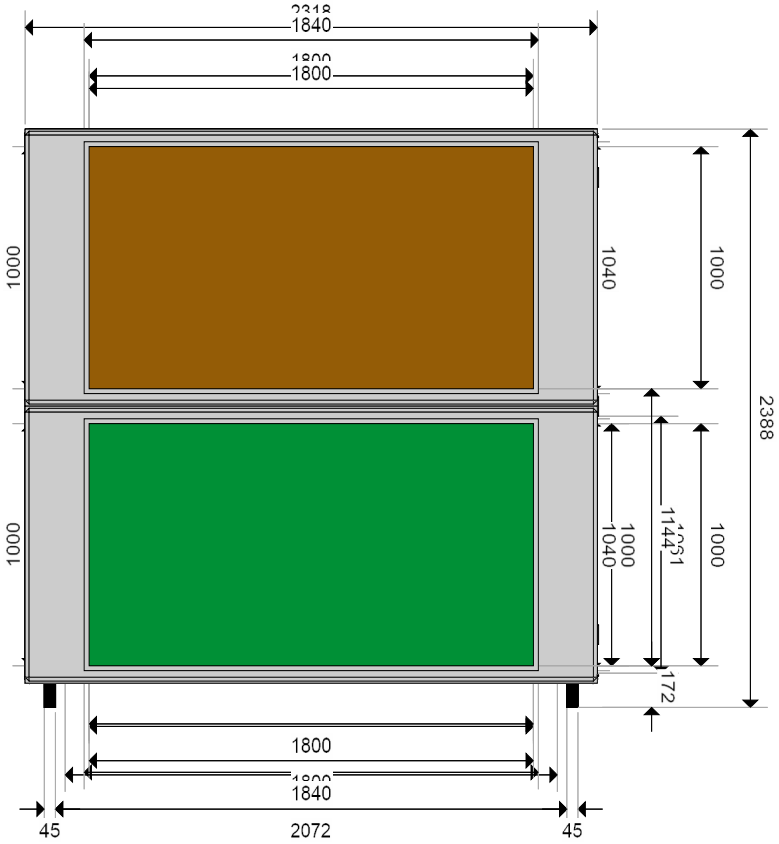

GOLD F RX		
Unit size	050	
Unit weight	1,409	kg
Duct Component Weight	206	kg
Length, max	2,685	mm
Height, max	2,388	mm
Width, max	2,318	mm

Connection size		
outdoor air	1,800 x 1,000	mm
exhaust air	1,800 x 1,000	mm
supply air	1,800 x 1,000	mm
extract air	1,800 x 1,000	mm

Project: Durrington High School
Unit name: 1 - AHU-01 - AHU-01
Unit ID: AD-10001474369
33 / 1.0.20230621.1110757
Date: 05/07/2023

Outdoor air
Supply air
Extract air
Exhaust air

Swegon

AHU Design
Sketch: Right-hand

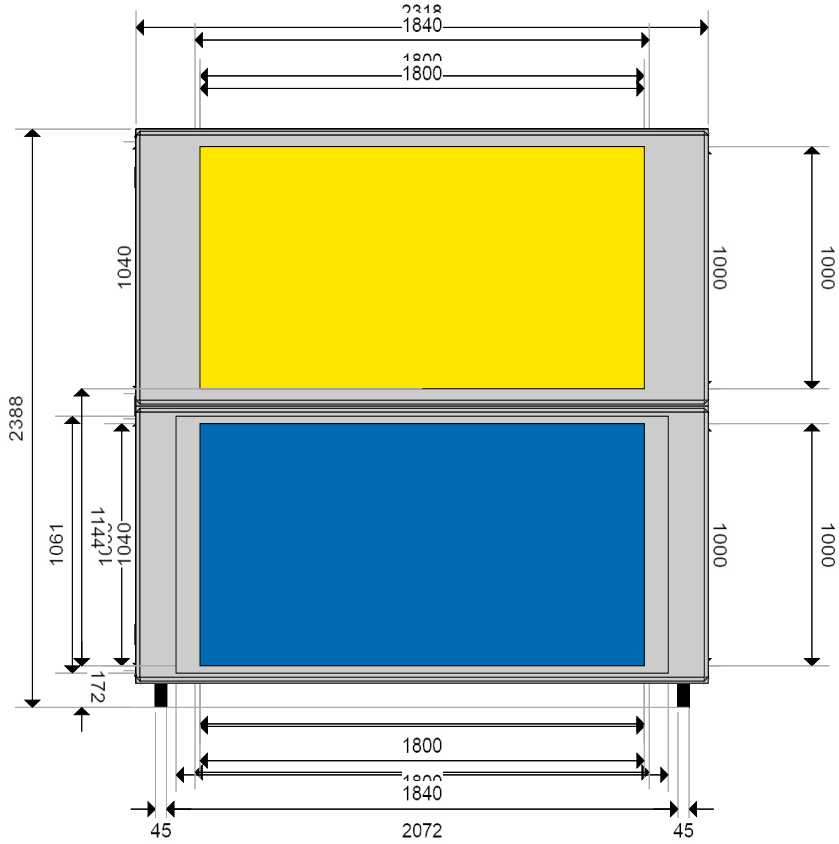

GOLD F RX		
Unit size	050	
Unit weight	1,409	kg
Duct Component Weight	206	kg
Length, max	2,685	mm
Height, max	2,388	mm
Width, max	2,318	mm

Connection size		
outdoor air	1,800 x 1,000	mm
exhaust air	1,800 x 1,000	mm
supply air	1,800 x 1,000	mm
extract air	1,800 x 1,000	mm

Project: Durrington High School
Unit name: 1 - AHU-01 - AHU-01
Unit ID: AD-10001474369
33 / 1.0.20230621.1110757
Date: 05/07/2023

Outdoor air
Supply air
Extract air
Exhaust air

Swegon

AHU Design
Sketch: Above

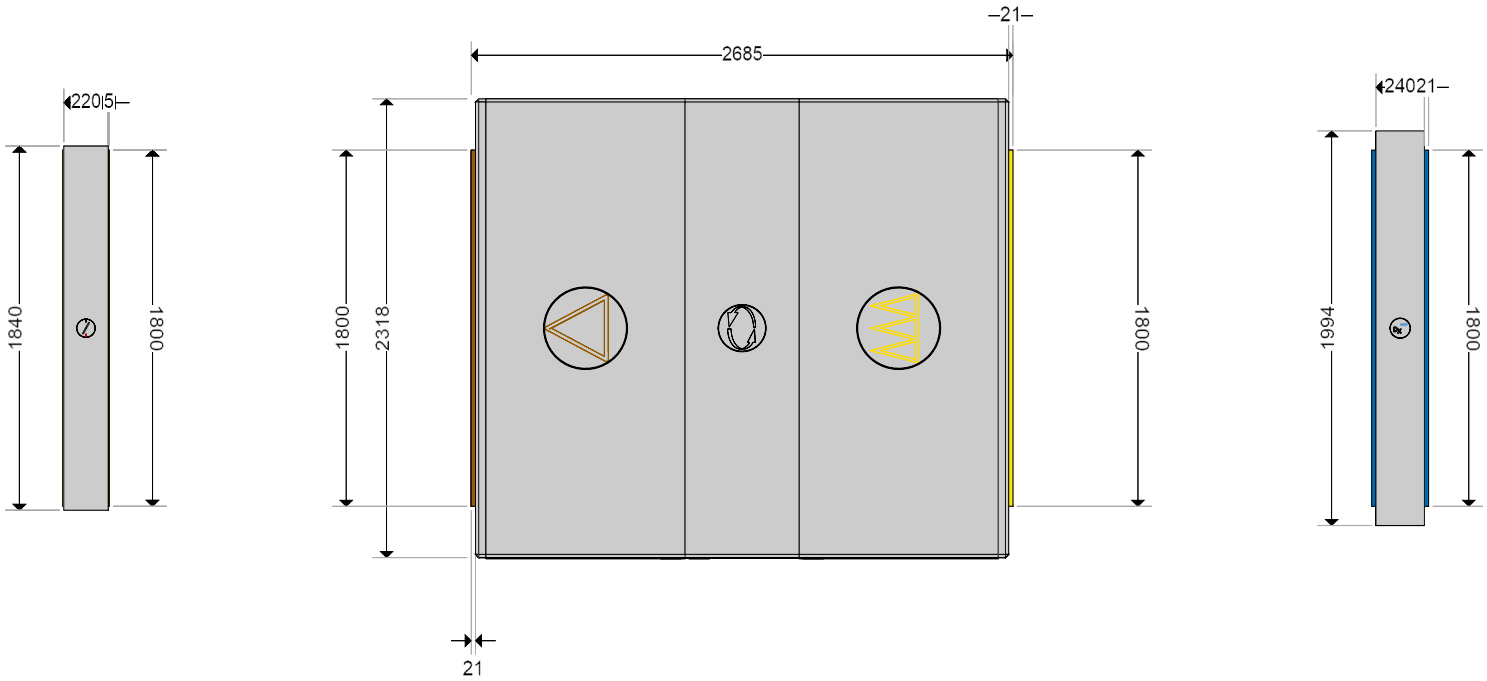

GOLD F RX		
Unit size	050	
Unit weight	1,409	kg
Duct Component Weight	206	kg
Length, max	2,685	mm
Height, max	2,388	mm
Width, max	2,318	mm

Connection size		
outdoor air	1,800 x 1,000	mm
exhaust air	1,800 x 1,000	mm
supply air	1,800 x 1,000	mm
extract air	1,800 x 1,000	mm

Project: Durrington High School
Unit name: 1 - AHU-01 - AHU-01
Unit ID: AD-10001474369
33 / 1.0.20230621.1110757
Date: 05/07/2023

Outdoor air
Supply air
Extract air
Exhaust air

Swegon

AHU Design
Sketch: Above left

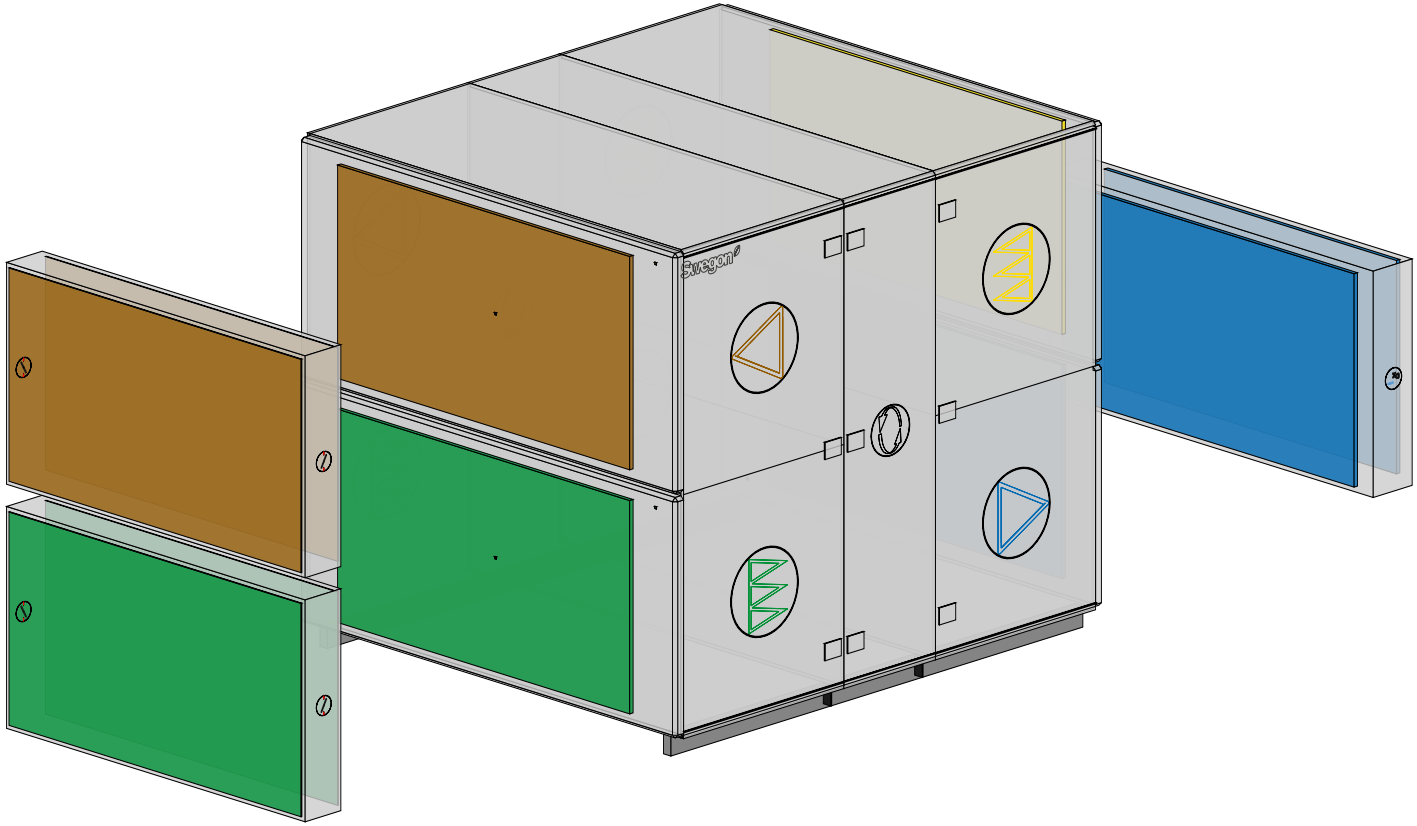

GOLD F RX		
Unit size	050	
Unit weight	1,409	kg
Duct Component Weight	206	kg
Length, max	2,685	mm
Height, max	2,388	mm
Width, max	2,318	mm

Connection size		
outdoor air	1,800 x 1,000	mm
exhaust air	1,800 x 1,000	mm
supply air	1,800 x 1,000	mm
extract air	1,800 x 1,000	mm

Project: Durrington High School
Unit name: 1 - AHU-01 - AHU-01
Unit ID: AD-10001474369
33 / 1.0.20230621.1110757
Date: 05/07/2023

Outdoor air
Supply air
Extract air
Exhaust air

Swegon

AHU Design
Sketch: Above right

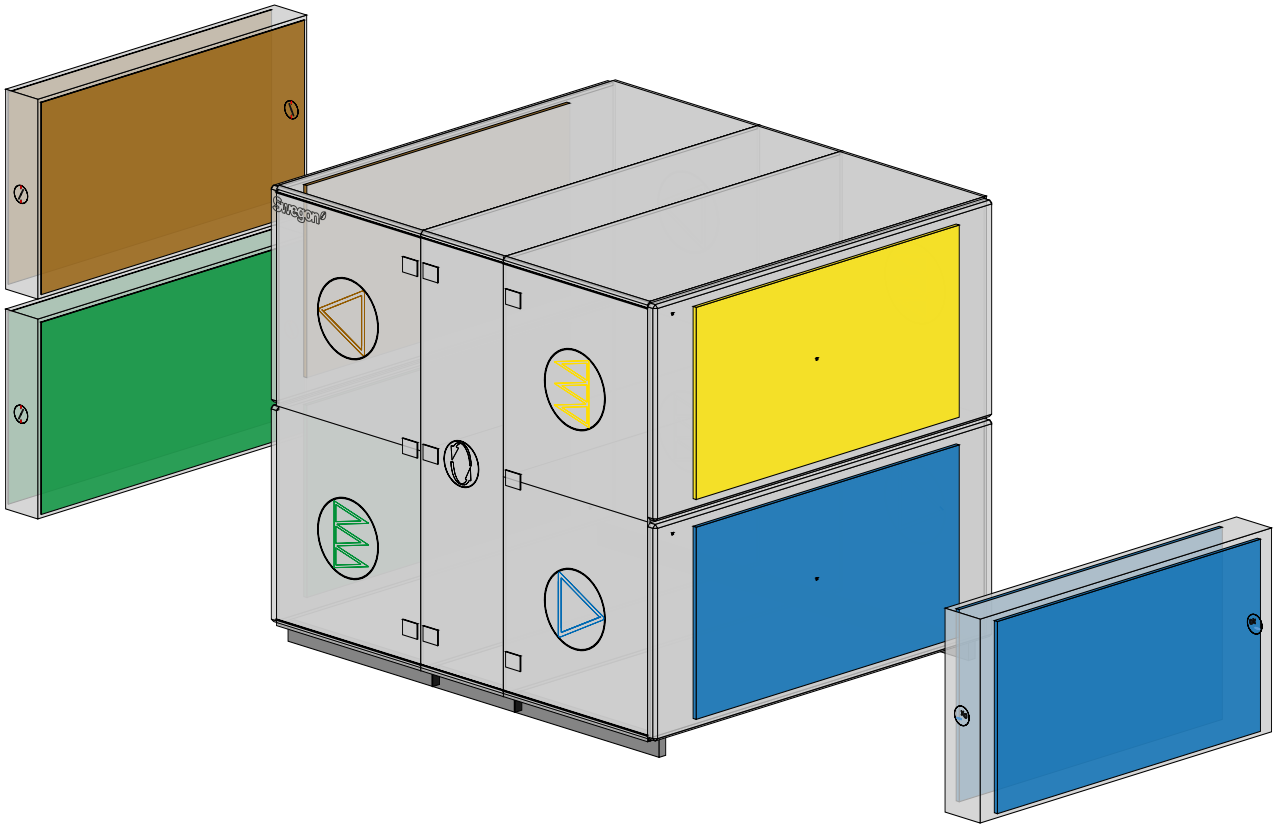

GOLD F RX		
Unit size	050	
Unit weight	1,409	kg
Duct Component Weight	206	kg
Length, max	2,685	mm
Height, max	2,388	mm
Width, max	2,318	mm

Connection size		
outdoor air	1,800 x 1,000	mm
exhaust air	1,800 x 1,000	mm
supply air	1,800 x 1,000	mm
extract air	1,800 x 1,000	mm

Project: Durrington High School
Unit name: 1 - AHU-01 - AHU-01
Unit ID: AD-10001474369
33 / 1.0.20230621.1110757
Date: 05/07/2023

Outdoor air
Supply air
Extract air
Exhaust air

Swegon