Max Panel Sizes

- AP-100-Acoustic Panel 490 (W) x 3000 (H)
- AP-50-Acoustic Panel 590 (W) x 3000 (H)
- AP-25-Acoustic Panel 650 (W) x 3000 (H)

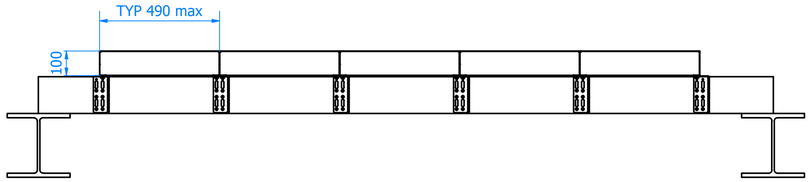

A (1 : 3)

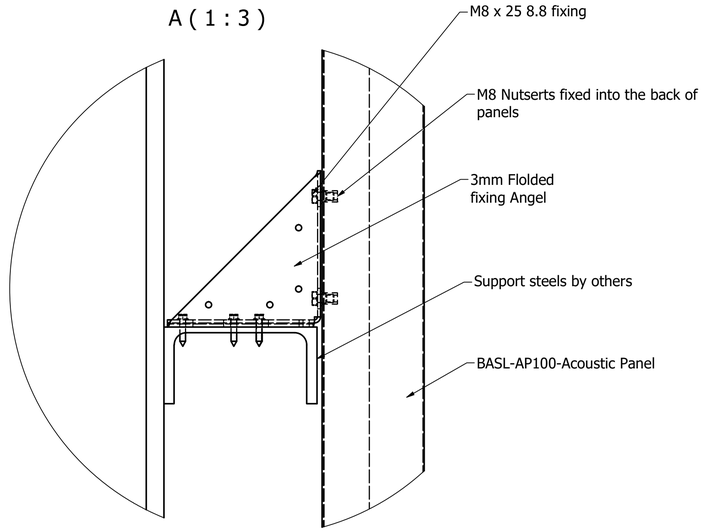

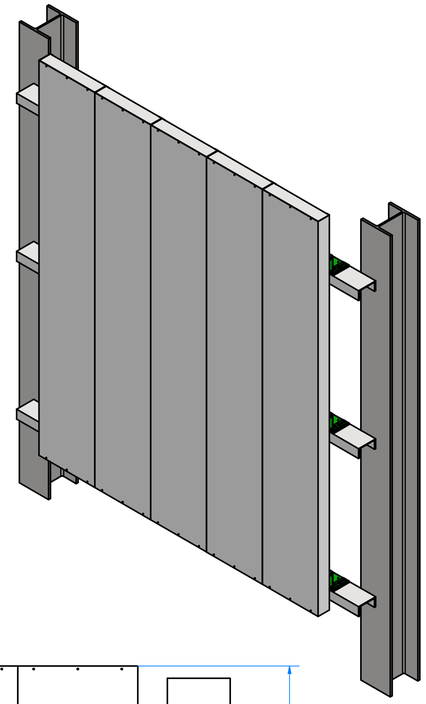

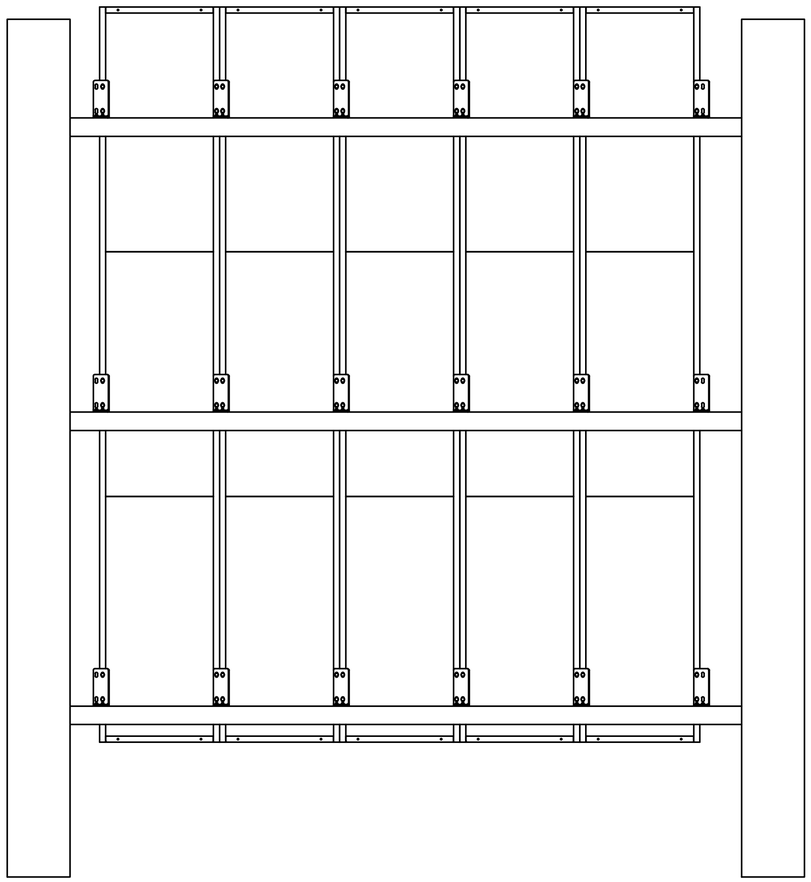

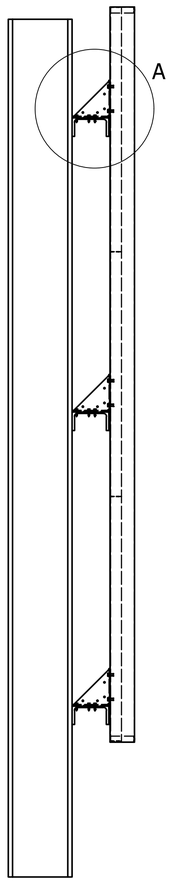

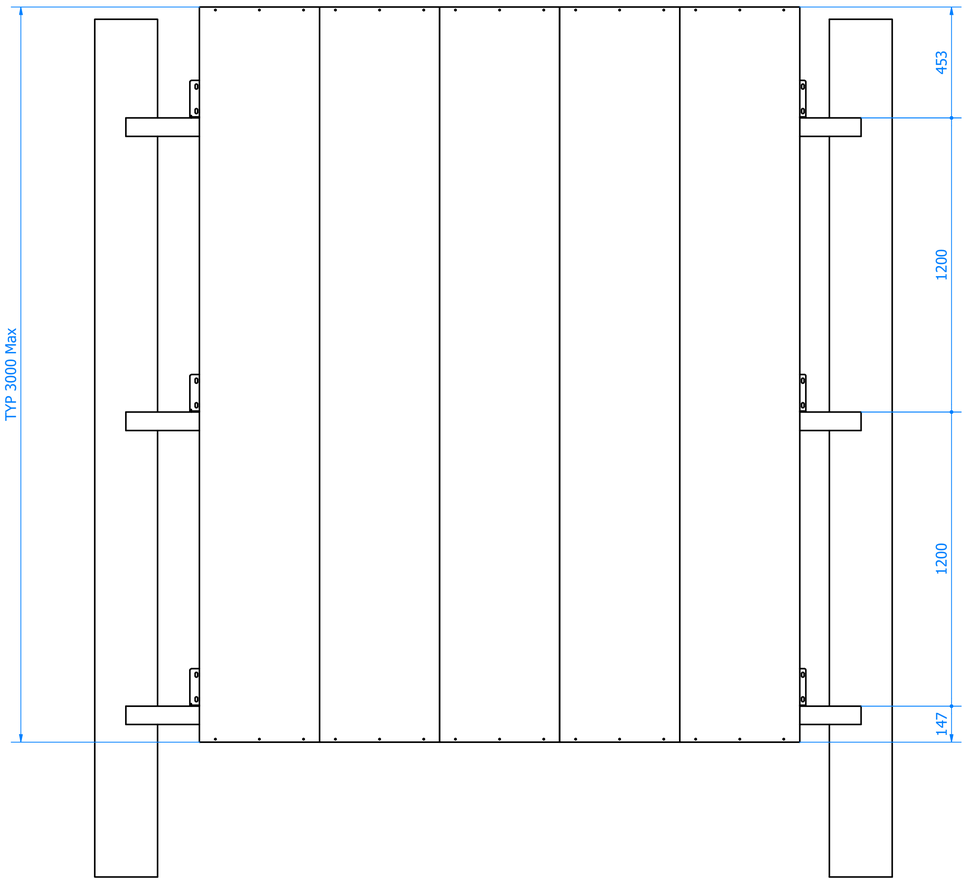

Designed by: Km	Checked by: IM	Scale: Not to Scale		Date: 23/07/2024	All dimensions in mm
Bespoke Acoustic Solutions					STD-AP-Panels on steel
				Assembly-STD-AP100-Panel on Steels	REV / Job No

Drawing Number:-