FREE UK DELIVERY

SITE SURVEYS

10 YEAR GUARANTEE

INSTALLATION SERVICE

MADE IN BRITAIN

SEMI VERTICAL CYCLE RACK

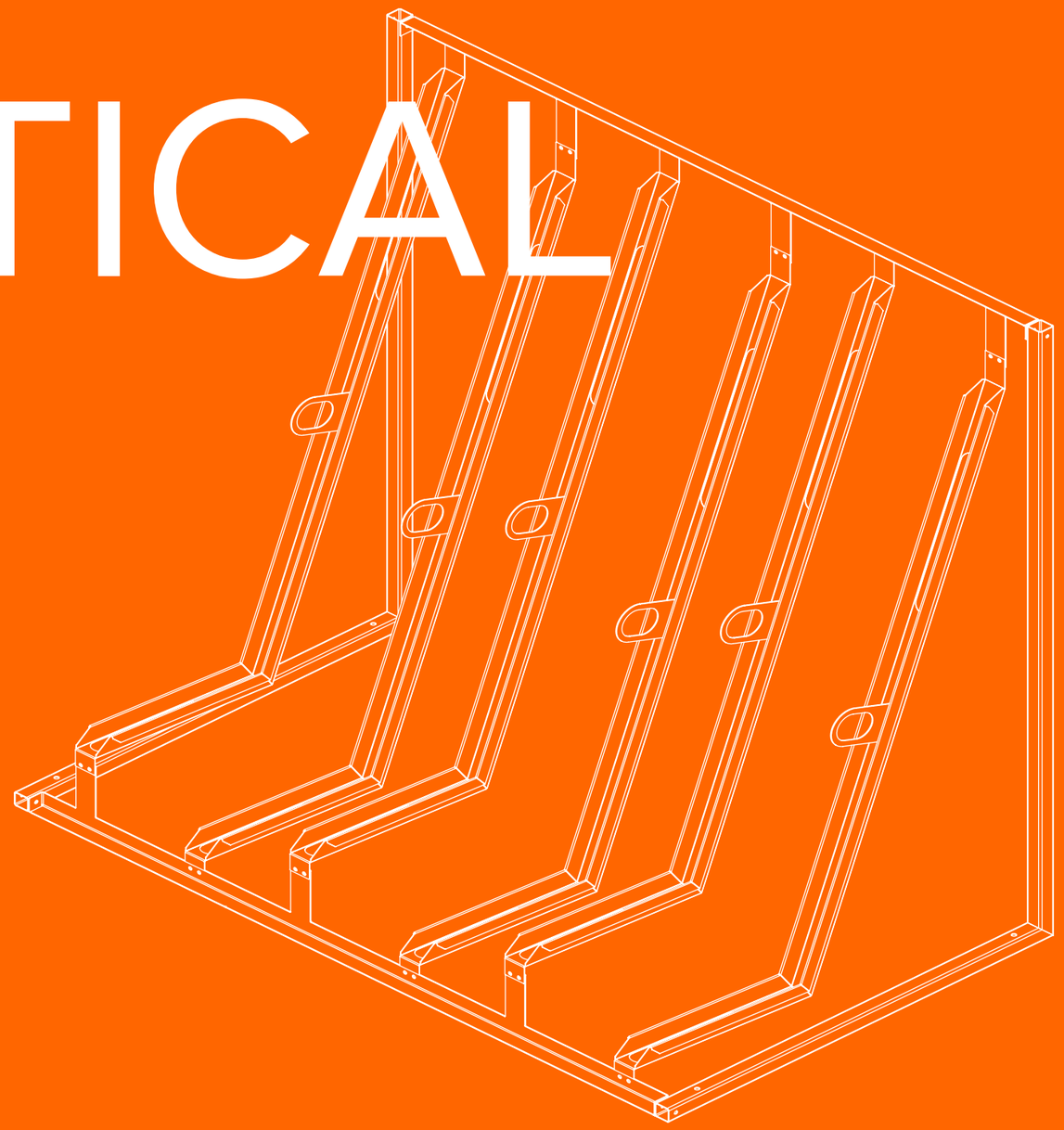

THE BIKE STORAGE COMPANY

0800 246 1723

www.thebikestoragecompany.co.uk

hello@thebikestoragecompany.co.uk

306 Harbour Yard, London, SW10 0XD

SEMI VERTICAL CYCLE RACK

0800 246 1723
www.thebikestoragecompany.co.uk



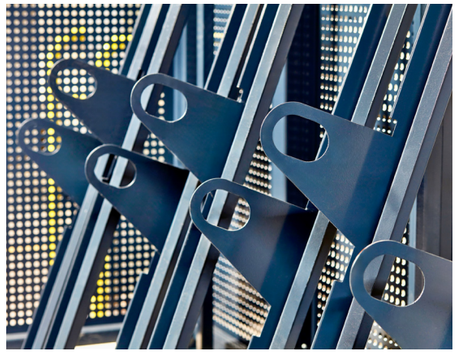









TOP

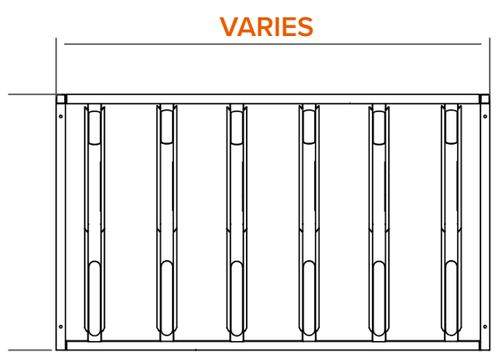

SIDE

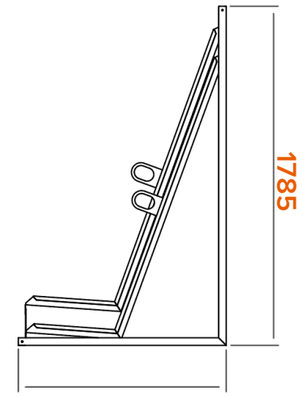

FRONT

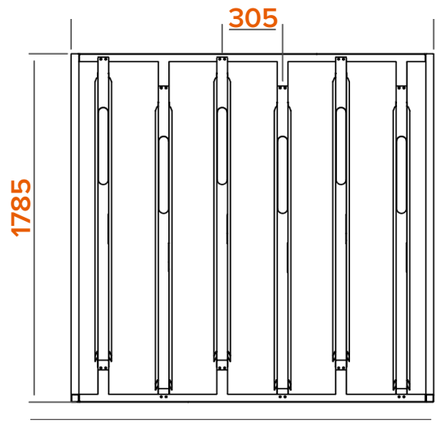

The Semi Vertical Bike Rack is designed for areas where space is at a premium. The cycle racks can be indefinitely extended, making them ideal for commercial or residential applications, both internally and externally. The rack has high-security locking hoops and all fixtures and fittings required for assembly. The Semi Vertical Rack is a simple-to-use, space-saving solution allowing bike users to store their bikes semi-vertically with both wheels secured together and offering a practical bike storage solution for space-premium areas such as offices, car parks, universities and transportation stations.

FEATURES

- Free Delivery
- UK Manufactured
- Fixtures and fittings included
- Racks priced per cycle space
- 305mm centres between channels
- Single or back-to-back versions are available
- Hot Dipped Galvanised to BS EN ISO 1461:2011
- Full site visit and layout design provided free of charge
- Code for Sustainable Homes compliant and BREEAM Compliant
- Height 1705mm | Depth 1115mm **(Entrance space of 1150mm advised)**
- Inclusive of secure locking hoop, allowing the wheels and the frame to be locked to the rack
- An E-Bike version is available, allowing users to charge their bikes while using secure storage

HELPFUL LINKS

- The Bike Storage Company
- Barbour Product Search
- External Works
- SpecifiedBy

POTENTIAL LAYOUTS

0800 246 1723
www.thebikestoragecompany.co.uk

INSTALL REQUIREMENTS

- **Rack to Rack Aisle Width:** 1100mm
- **Rack to Wall Aisle Width:** 900mm
- **Centre of Rack Leg to Wall Tolerance:** 9mm
- **Minimum Ceiling Height:** 2000mm

SPACING REQUIREMENTS

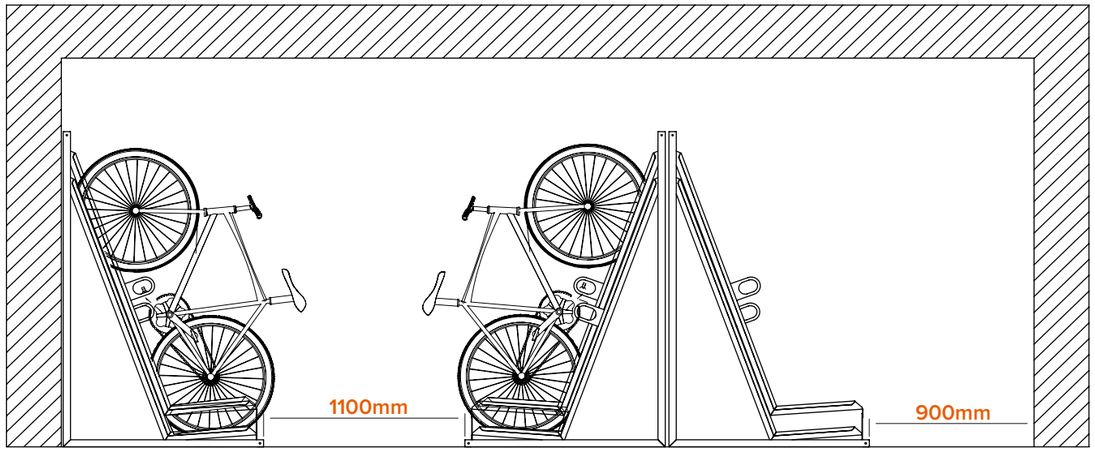

TOP

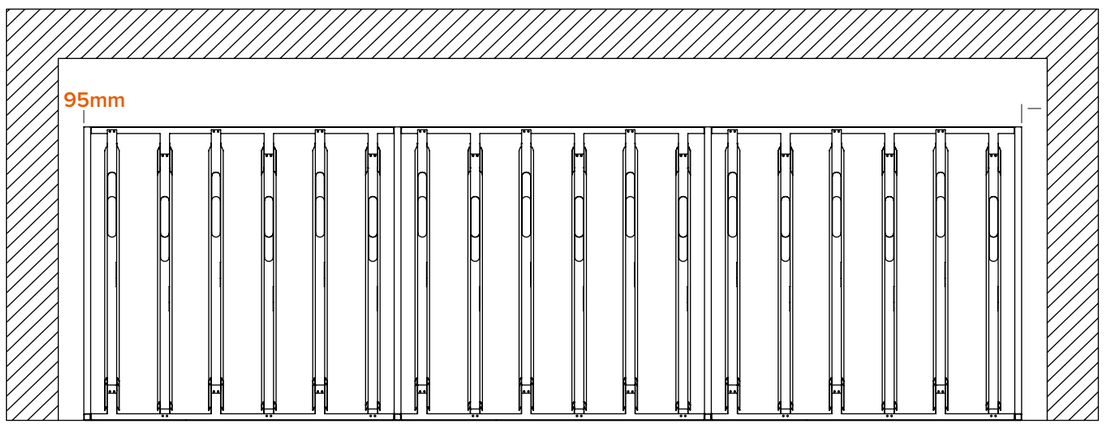

FRONT

LAYOUT 1

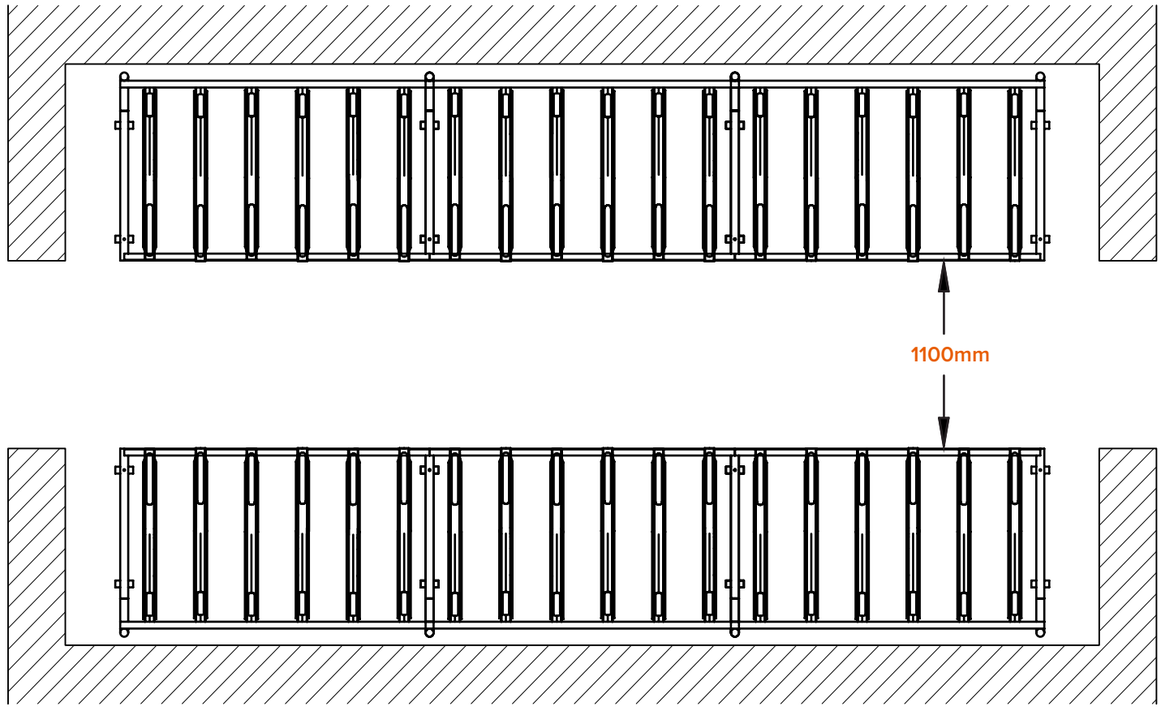

PLAN

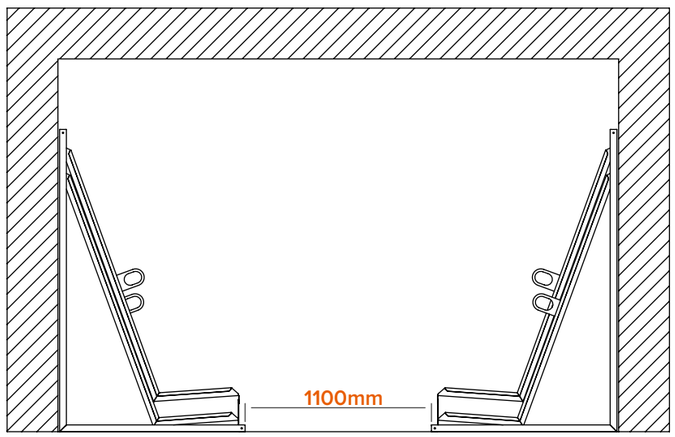

SIDE

POTENTIAL LAYOUTS

0800 246 1723
www.thebikestoragecompany.co.uk

LAYOUT 2

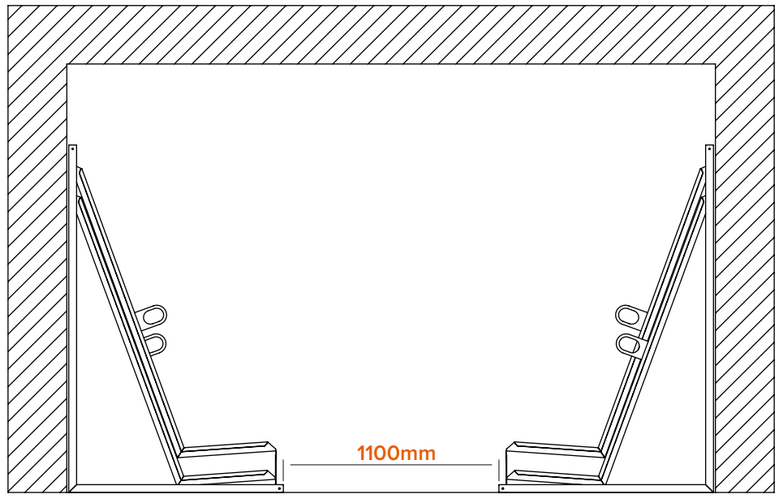

TOP

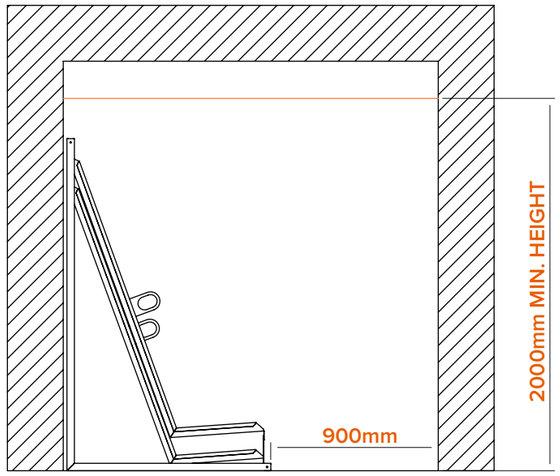

SIDE

LAYOUT 3

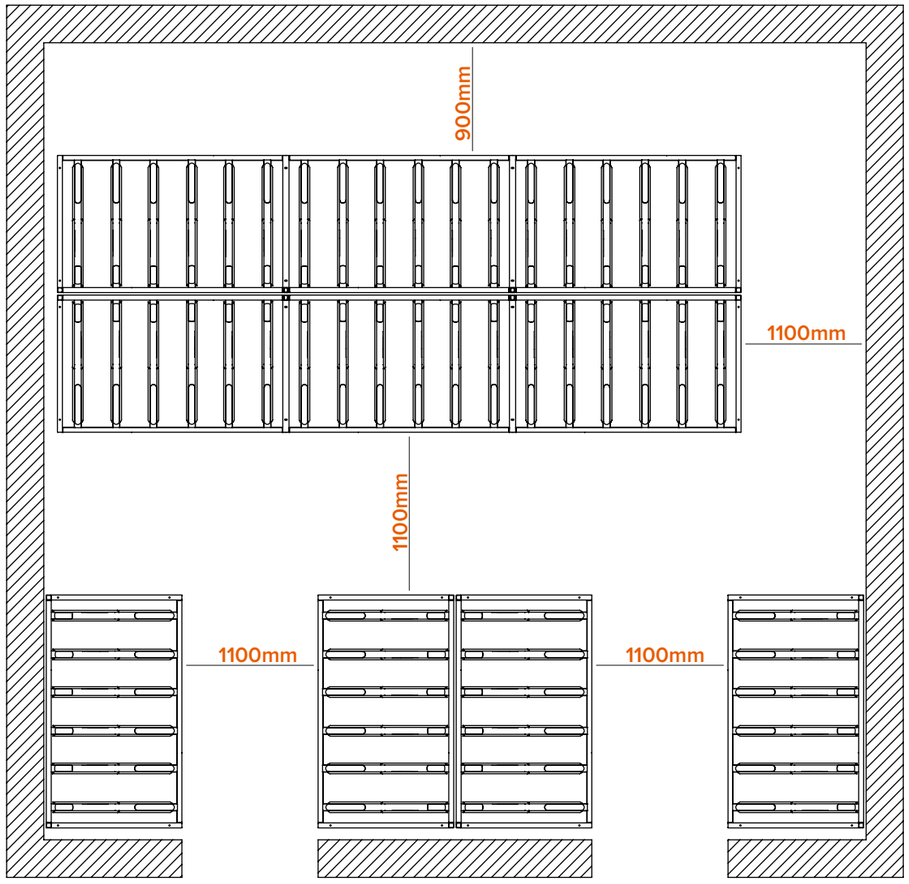

TOP

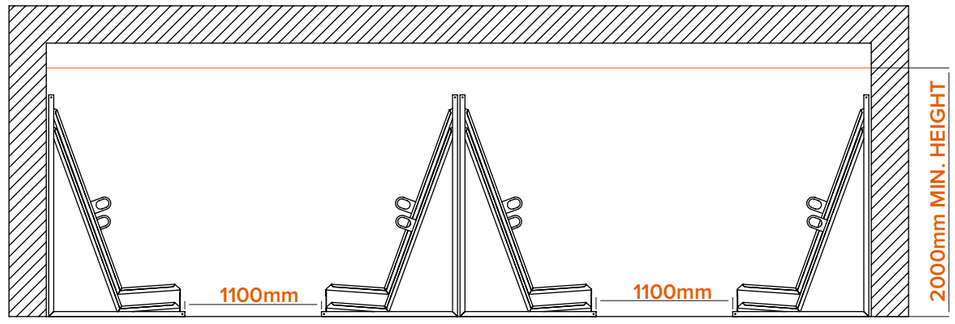

SIDE