ALL DIMENSIONS ARE TO BE CHECKED ON SITE PRIOR TO INSTALLATION AND THE ARCHITECT IS TO BE NOTIFIED OF ANY DISCREPENCIES.

© This drawing is copyright and must not be reproduced without the written consent of the Architect.

REV DATE DESCRIPTION

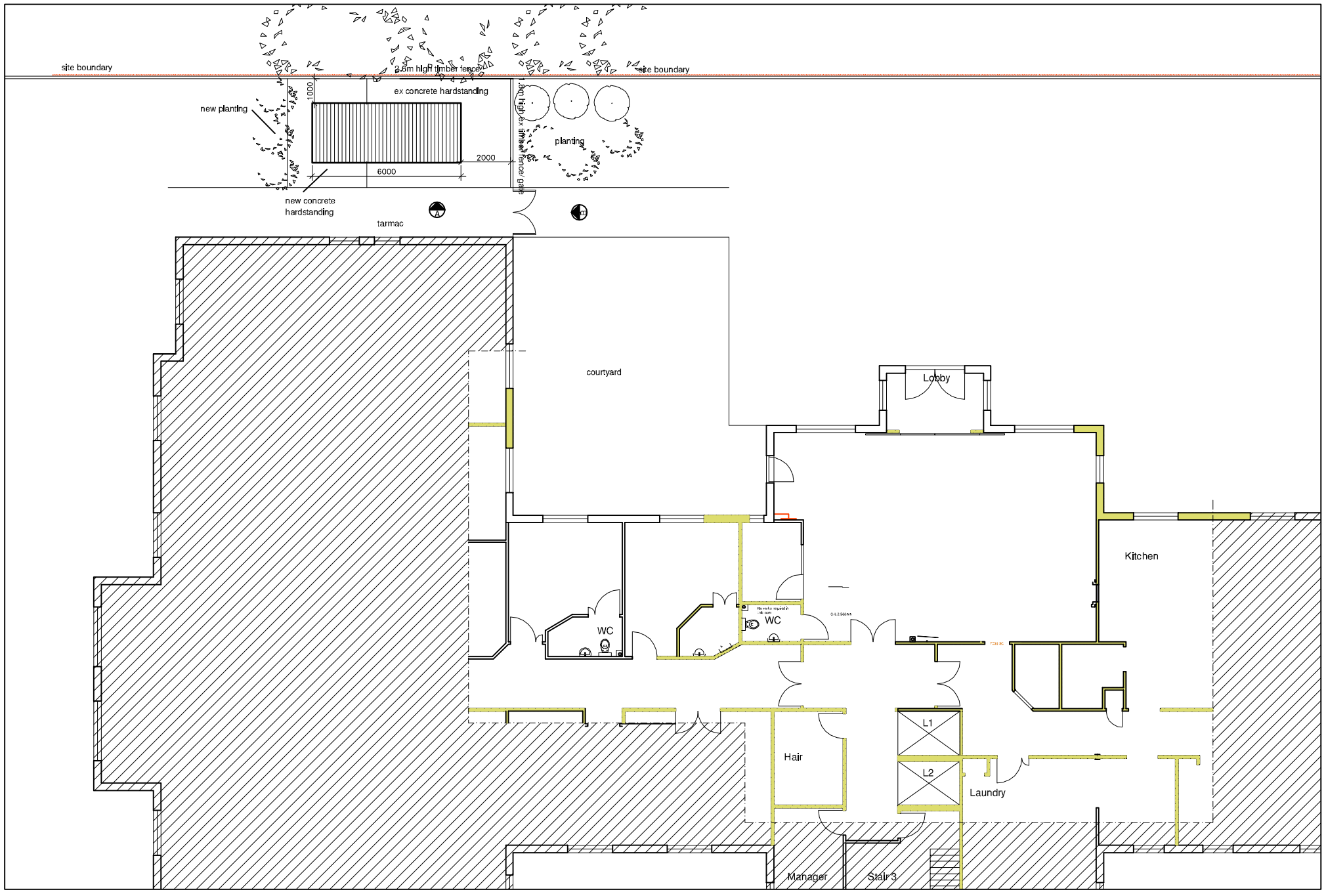

1:200 Site plan as proposed

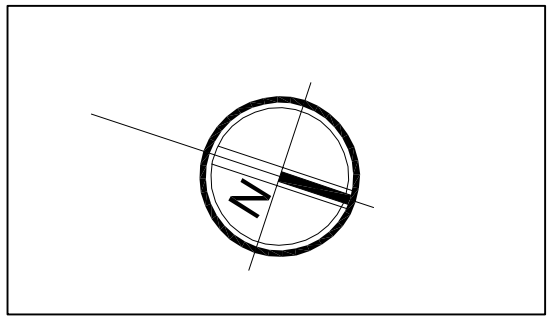

Scale Bar 1:200

0 2 4 6 8 10 20m

PLANNING

Storage unit at Haviland House,
Robin road, Goring st, Goring-by-Sea BN12 6FE

Site plan as proposed

saville jones | consultants

DWG: \DRAWINGS\PROFORM\SJA_A1_50.DWG

date: Oct 23
scale: 1:200 at @A3

23014 | SK | 04