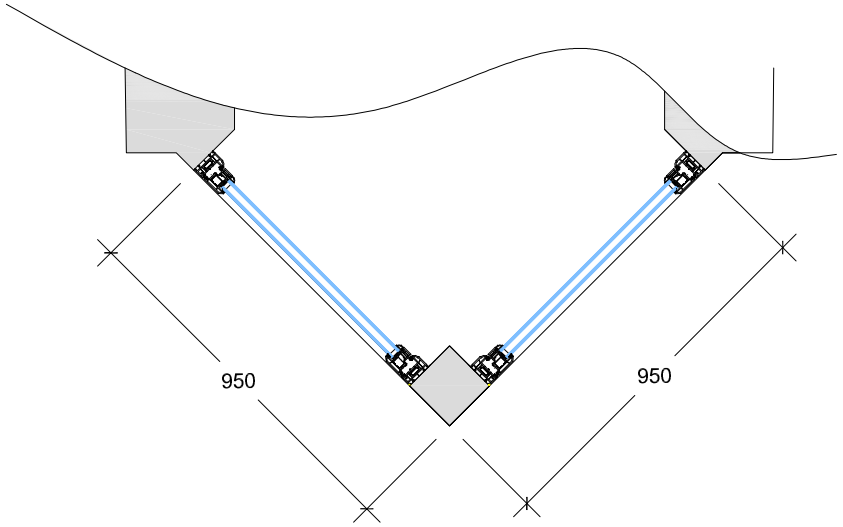

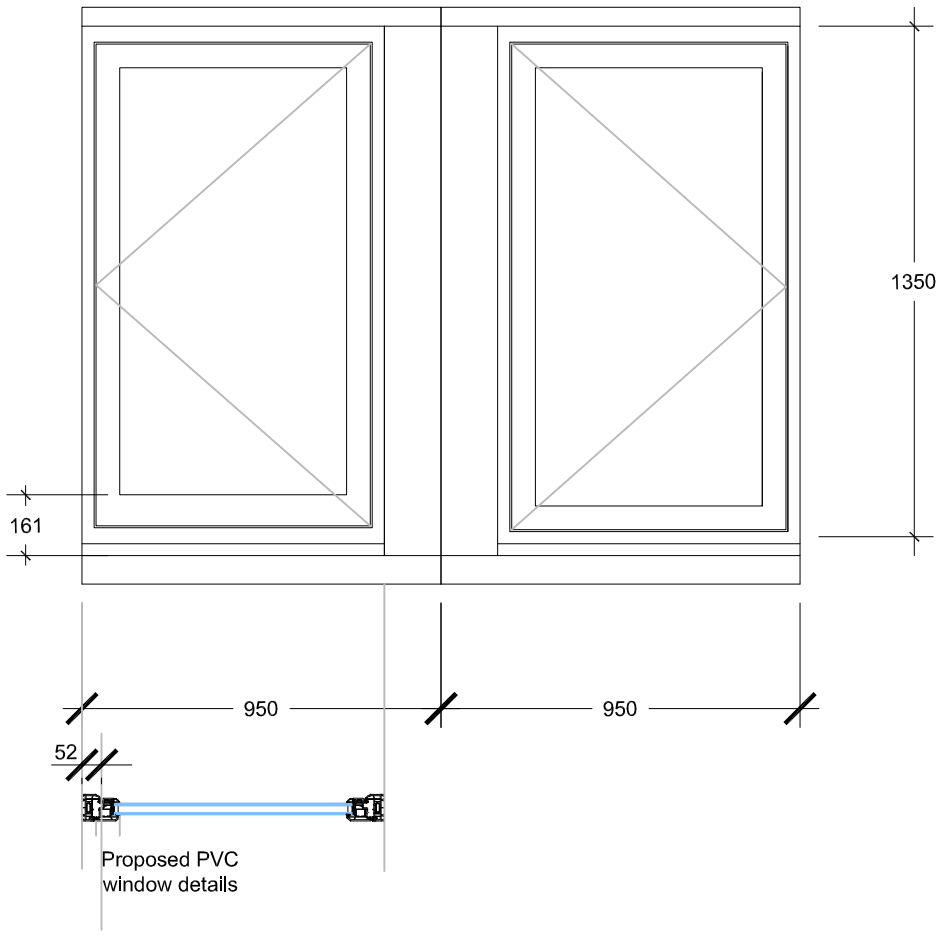

1:20

400mm 0 400mm 800mm 1200mm 1600mm 2000mm

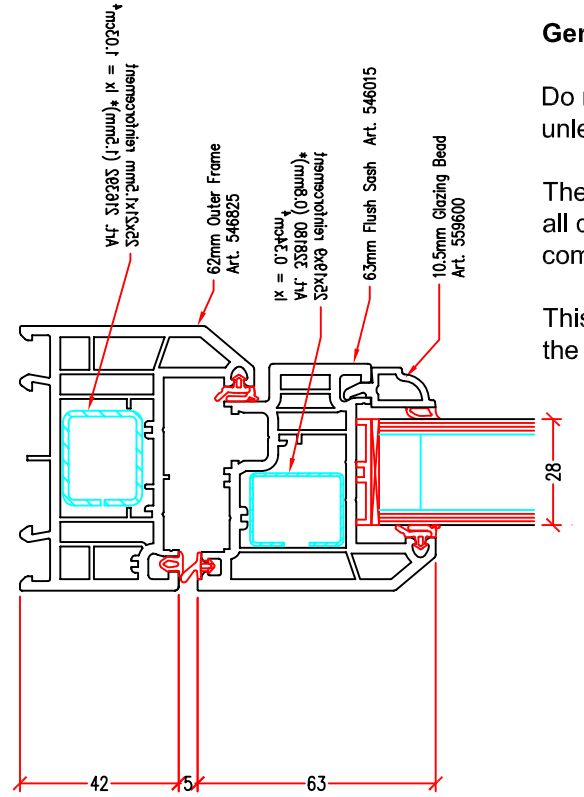

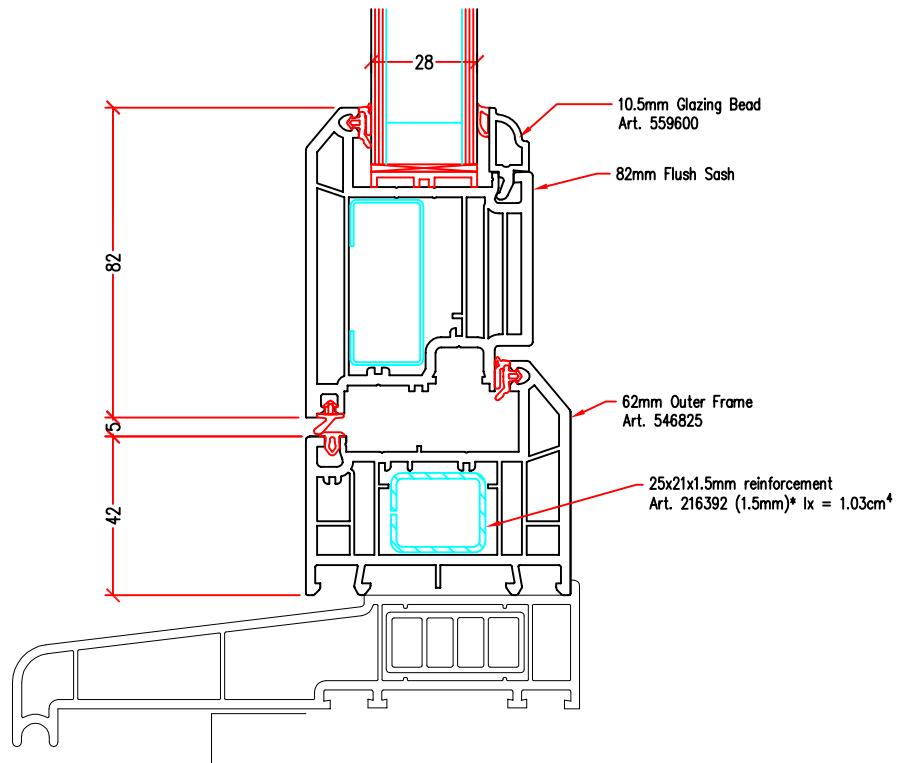

General Notes:

Do not scale dimensions from this drawing, unless for Planning purposes.

The Contractor is responsible for checking all dimensions on site prior to commencement of the works.

This drawing is to be read in conjuction with the specification.

Revision	Date	Description
A	28/10/25	Detail added plus deeper bottom rail.

Brian Elstone Surveying Services Ltd
Brian Elstone, MCIOB,MCABE
Building Surveyor and Architectural Consultant
CDM Consultant
6 Canterbury Road, Rustington,
West Sussex, BN16 3JA
Phone: 01903 784884, Mobile: 07710 593021.
Email: brian@elstone.biz

Client:
Ms Gabriele Scott, Flat 1, 3 Cowper Road, Worthing, BN11 4PD.

Project:
Replace Windows to Front.

Drawing Title:
Proposed Windows - Window B - Details

Scale:	Date:	Drawn By:
1:20	09/06/2025	BE

Drawing Number:	Revision:
1697/005	A