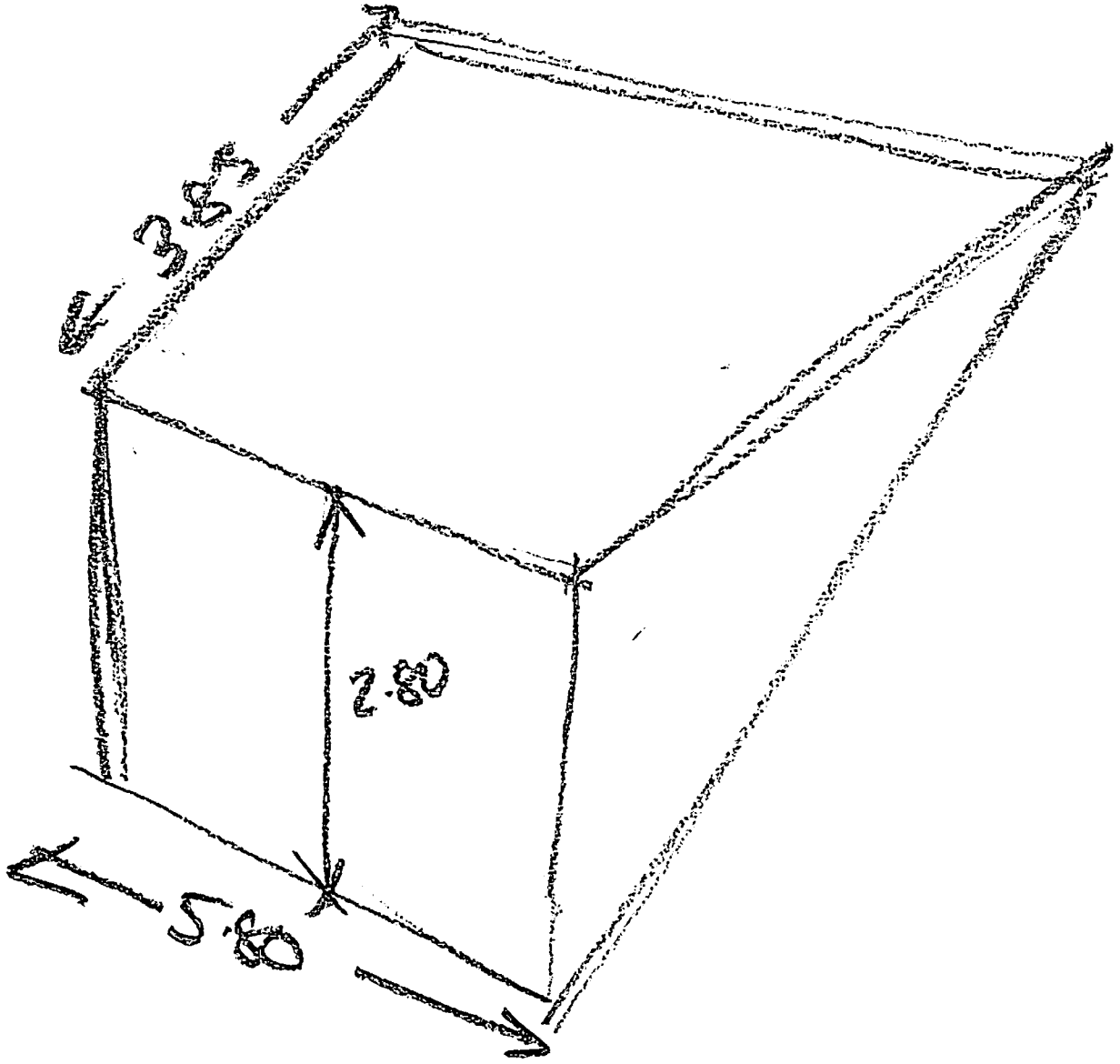

$$\frac{5.80 \times 2.80 \times 3.85}{2}$$

$$= 31.26 \text{ M}^3$$

36 Greenacres