Form Ref. No. 353603

ADUR DISTRICT COUNCIL

Application For Planning Permission

TOWN AND COUNTRY PLANNING ACT, 1990

4 copies of this form required, together with plans and appropriate fee.
All measurements are to be given in metric.
If site relates to Lancing or Sompting, please submit 5 copies.

FOR OFFICIAL USE ONLY
Appl. No A/c/07/0467
Date Received
Fee 135. 10 MAY 2007
Rem. List

Applicant's Details

Title		Address	c/o Rev'd Victor Standing
Forenames			The Vicarage
Surname or Company/ Organisation	PCC of St Mary de Haura, Shoreham		Church Street
			New Shoreham
			Sussex
Telephone	01273-452109	Postcode	BN43 5DQ
Email			

Do you have an agent? Yes

Agent's Details

Title	Mr	Address	Carden & Godfrey Architects
Forenames	Richard		33 Clerkenwell Close
Surname	Andrews		
			London
Telephone	020-7490 0300		
Email Address	richard@cardenandgodfrey.co.uk	Postcode	EC1R 0AU

Application Type

(a) Full planning permission (including changes of use) YES

(b) Outline planning permission

If 'Yes', state those matters to which this application relates (tick where appropriate)

- (i) Layout ☐
- (ii) Scale ☐
- (iii) External Appearance ☐
- (iv) The means of access ☐
- (v) Landscaping of the site ☐

(c) Renewal of a temporary permission

If 'Yes', state the Date
and Permission Application
and the Condition Number

(d) Permission for retention of building or continuance of use without complying with a condition imposed on a planning permission

If 'Yes', state the Date
and Permission Application
and the Condition Number

(e) Permission to develop land without complying with a condition imposed on a planning permission

If 'Yes', state the Date

and Permission Application

and the Condition Number

Land Details

Full address or location of the land to which this application relates

Churchyard
The Church of St Mary de Haura
New Shoreham

Does the applicant own or control any adjoining land? No

If 'Yes', this land must be edged blue on the location plan

Area of site (Hectares) 0.85

Dimensions of the application site and distances from the new buildings to boundaries must be clearly indicated on plans

Proposal Details

For Residential Developments, please enter the number of units (flats, bungalows, houses)
- for a Change of Use that REDUCES the number of units, please enter a negative(-) number.

Description of proposed development: Removal of one lighting column and the erection of 7no lighting columns for churchyard pathway lighting; Installation of 1no concrete bunker, matching existing, for improved floodlighting of the church

(If residential development, state type if known, e.g. houses, bungalows, flats)

State whether the proposal involved:-

(i) New building(s) or structure(s) Yes

(ii) Alteration or extension of building(s) No

(iii) Construction of a new *vehicular* access to a highway No

Construction of a new *pedestrian* access to a highway No

(iv) Alteration of an existing *vehicular* access to a highway No

Alteration of an existing *pedestrian* access to a highway No

(v) Closure of existing access No

(vi) Change of use only No

Is there to be any 'furniture' placed on a street/highway? No

Use of Land

Particulars of **Use** of Building or Land: Please State

Present use: churchyard

If vacant, the last use:

Additional Information

(a) Is the application for industrial, office warehousing, storage, shopping, commercial purposes or places of public assembly? No

(b) Is the application for the winning or working of minerals? No

(c) Is the application for an agricultural dwelling or building? No

(d) Does the proposed development involve the demolition of any residential units? No

If 'Yes', how many units? Please indicate their position on plans

(e) Does the proposed development involve the felling of any trees? No If 'Yes', indicate their position on plans

(f) Does the proposed development involve any public right of way within the site? No If 'Yes', indicate their position on plans

(g) Does the proposed development involve demolition or alteration of a building or Special Architectural or Historic interest or demolition within a Conservation Area? No

If 'Yes', a separate application for **Listed Building Consent** or **Conservation Area Consent** may be necessary

(h) (i) How will surface water be disposed of? existing

(ii) How will foul sewage be disposed of? n/a (e.g. mains, cesspit, etc.)

(i) Is there to be any 'furniture' placed on the street/highway? No

Process Description

Additional information required in respect of applications for Industrial, Office, Warehousing, Storage, Shopping, Rest and Nursing Homes, Commercial Purposes or Places of Public Assembly.

In the case of industrial development, give a description of the processes to be carried on and of the end products, and the type of plant or machinery to be installed. Please relate your answer to the 'Floor Areas & Uses' section.

Details of Proposal

Is the proposal related to an existing use on or near the site?

If 'Yes', please explain the relationship

Is this a proposal to replace existing premises in this area or elsewhere which have become obsolete, inadequate or otherwise unsatisfactory? ☐

If 'Yes', please give details including gross floor area of such premises and state your intentions in respect of those premises.

Details of Floor Areas and Uses - please specify in square metres

	Existing Floor Space or use (if any)	**Proposed New Floor Space or use**	**Total Floor Space** (Allow for any space lost)
What is the amount of industrial floor space?			
What is the amount of office floor space?			
What is the amount of retail floor space?			
What is the amount of storage or warehousing floor space?			
Other Use 1 (please specify)			
Other Use 2 (please specify)			
TOTALS			

Other Uses 1 or Comments/Information

Details of Staff	**Office**		**Industrial**		**Other**	
	Male	Female	Male	Female	Male	Female
(i) **Number of staff in existing premises on the site**						
(ii) **How many new staff will be employed on the site as a result of the development?**						
(iii) **If you propose to transfer staff from other premises, please give details of the numbers involved***						

*and details of the premises affected.

Premises Details

In the case of restaurants, hotels, public houses, theatres, cinemas, meeting halls, Rest and Nursing homes, etc., please specify:

Type of Business

Public floor space (Total)

Seating capacity

Bar floor area (sq.m)

Single bedrooms

Double bedrooms

Parking & Traffic

What provisions have been made for parking, loading and unloading of vehicles within the curtilage on the site?

State number of car spaces

and Lorry spaces

What is the estimated vehicular traffic flow to the site during a normal working day?
Please include all vehicles

Separately specify those used by employees driving to work:

Waste

What is the nature of disposal of any trade effluents or trade refuse?

What is the volume of any trade effluents or trade refuse?

and the proposed means of disposal of any trade effluents or trade refuse?

Will the proposed use involve the use or storage of any hazardous substances?

If 'Yes', please indicate

Plans

List of drawings and plans submitted as part of the application - indicate drawing numbers and scales.
4 sets of all drawings are required.
Additional copies in respect of major applications will assist in determination of such applications.
All measurements are to be given in metric (89/617 EEC Directive).

Plan / Drawing	Number	Scale
Location plan	40147/8/1	1:1250
New lighting location plan	40147/8/2	1:500
Floodlight box	40147/8/3	1:20
Proposed churchyard lights	40147/8/4	nts

Fees

If a fee is submitted, please give the amount £135.00 Calculated Fee

I/WE APPLY FOR PLANNING PERMISSION AS DETAILED ABOVE ☑ Tick to agree to this statement.

Signed: [redacted] PCC of ST MARY DE HAURA, SHOREHAM

On behalf of: (Insert applicant's name if signed by agent)

Certificate

Certificate under Section 65 of the Town and Country Planning Act 1990 (Article 7 of the T & CP (General Development Procedure) Order 1995. **N.B.** A signed certificate MUST accompany this application. If the applicant is the sole owner (a) the following certificate should be completed and signed.
'Owner' means a person having a freehold interest or tenancy the unexpired term of which was not less than 7 years

Certificate A

I certify that:
on the day 21 days before the date of the accompanying application nobody, except the applicant, was the owner of any part of the land to which the application relates.
None of the land to which the application relates is or is part of an agricultural holding.

Do you agree to these statements? Yes

OR

[ ] given requisite notice to every person other than [ ] who, on the day 21 days before the date of the application was a tenant of an agricultural holding on all or part of the land to which the application relates, as follows

Name of Tenant	Address at which Notice was served	Date on which Notice was served

Do you agree to these statements?

Signed: [redacted] Date: 8/5/07

On behalf of: PCC of ST MARY DE HAURA, SHOREHAM

ADUR DISTRICT COUNCIL
PLANNING DIVISION

PLAN No.	Ar/62/07
DATE RECEIVED	10 MAY 2007

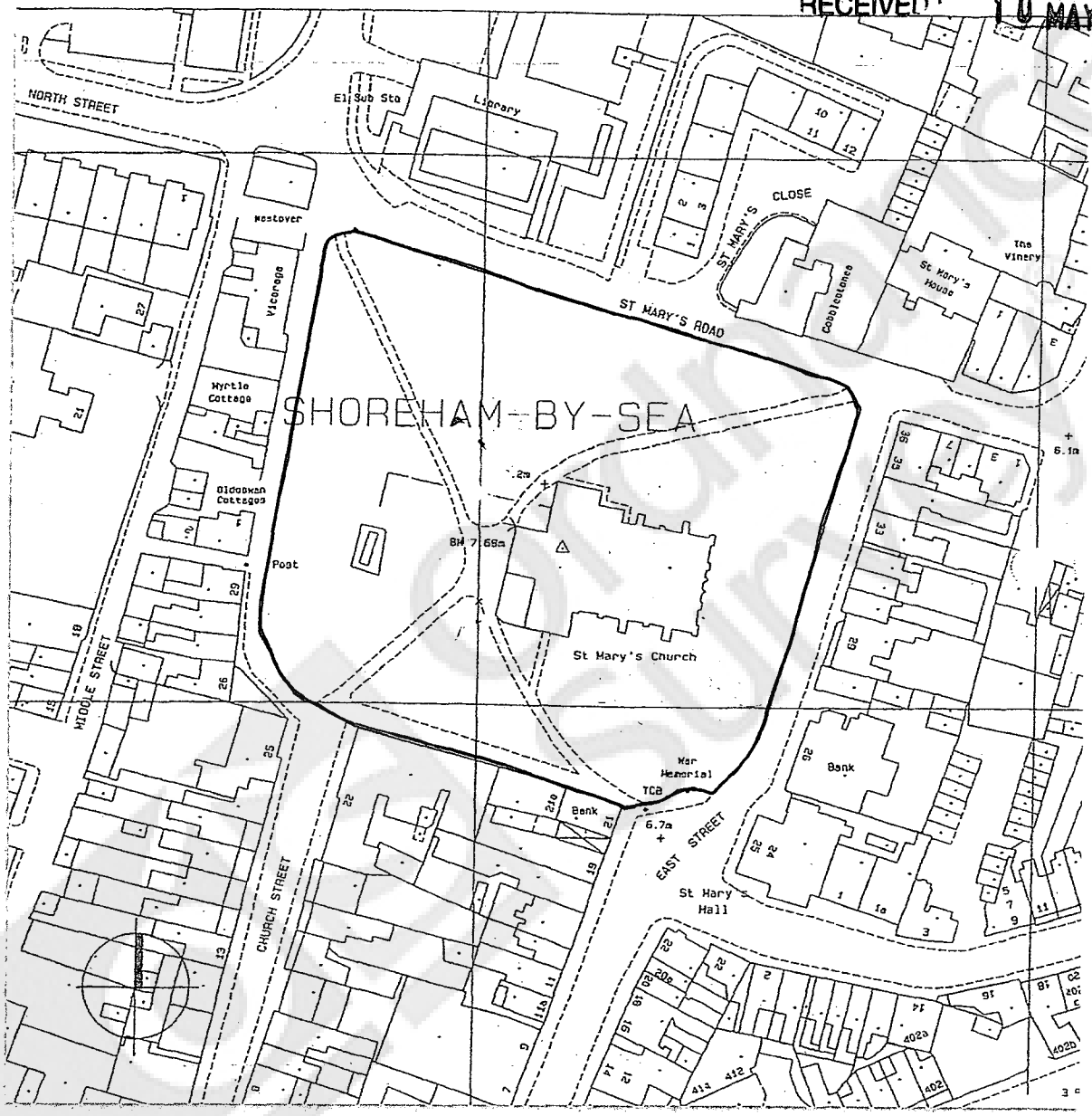

CARDEN & GODFREY
Architects

Carden & Godfrey Limited
33 Clerkenwell Close
London EC1R 0AU
Telephone 020 7490 0300
Facsimile 020 7490 0004

ST MARY DE HAURA, SHOREHAM
LOCATION PLAN
1:1250 4-2007 40147/8/1

© Carden & Godfrey Ltd own the copyright of this drawing and design which must not be reproduced in whole or part without the written permission of Carden & Godfrey Ltd.

Hobs Reprographics London 69

ST MARY DE HAURA, SHOREHAM
EXISTING FLOODLIGHT BOXES *(two of existing nine)*

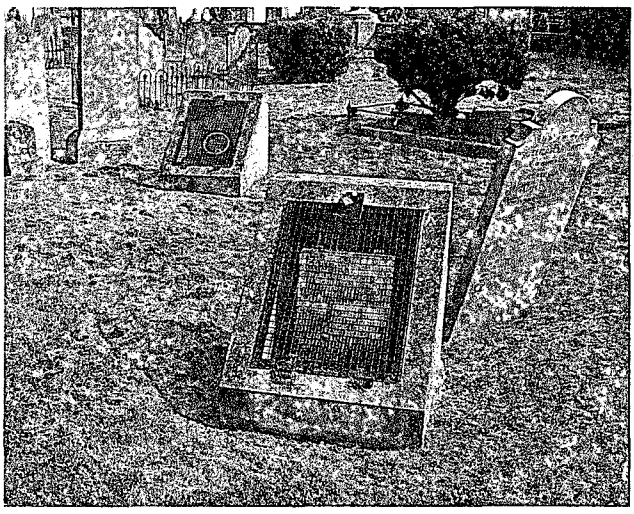

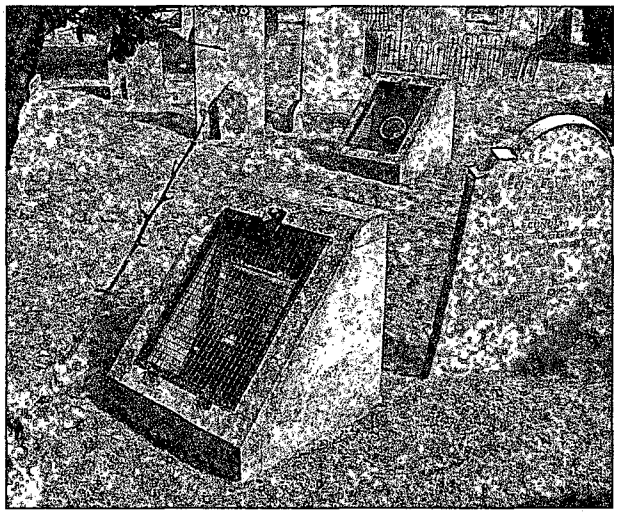

ADUR DISTRICT COUNCIL
PLANNING DIVISION
PLAN No. Ad0227a07
DATE RECEIVED 10 MAY 2007

PLAN

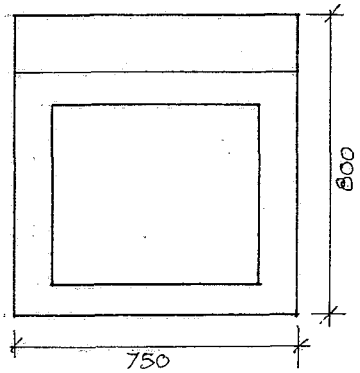

EXISTING
FLOODLIGHT BOXES

FRONT GRILLE OMITTED
ALL PRECAST CONCRETE
ON CONCRETE BASE.

AXONOMETRIC

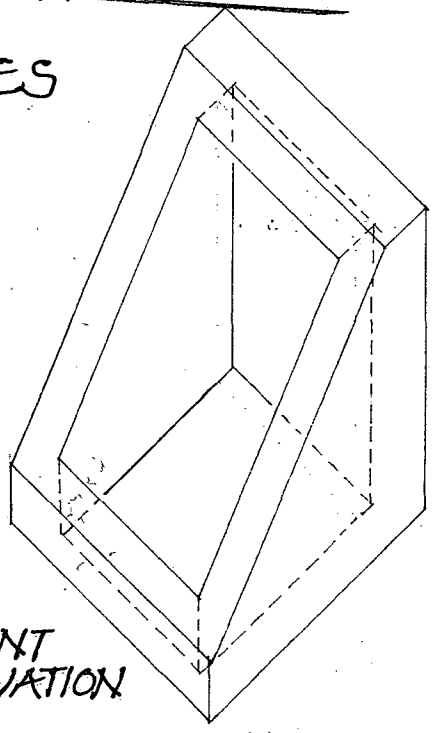

SECTION
(SIDE ELEVATION)
SIMILAR)

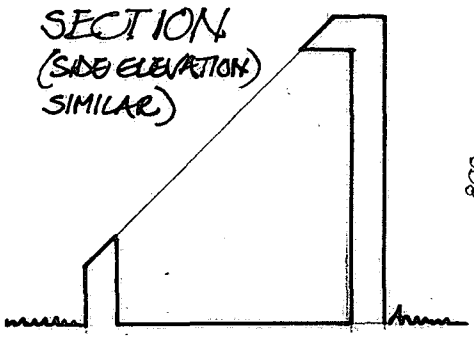

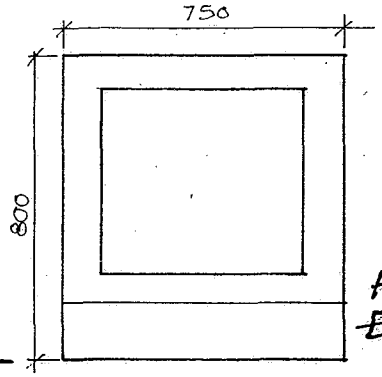

FRONT ELEVATION

CARDEN & GODFREY
Architects

Carden & Godfrey Limited
33 Clerkenwell Close
London EC1R 0AU
Telephone 020 7490 0300
Facsimile 020 7490 0004

ST MARY DE HAURA, SHOREHAM
1:20 4-07 40147/8/3

© Carden & Godfrey Ltd own the copyright of this drawing and design which must not be reproduced in whole or part without the written permission of Carden & Godfrey Ltd.

Hobs Reprographics London 69

heritage
by holophane



Specification

The luminaire shall consist of a hand-crafted copper frame with stainless steel reinforcing rods secured in frame corners and a period style tent canopy housing the control gear for use with a range of compact fluorescent and HID lamps in a choice of wattages. The frame shall hold one-piece polycarbonate glazing. The optic shall consist of a pre-anodised aluminium reflector.
The luminaire shall be suitable for 76mm post-top mounting via a frog bracket made of zinc sprayed and powder-coated steel. The luminaire shall be sealed to IP65 and designed to EN60598-2-3. A factory-fitted miniature photocell shall be available as an option. A range of complementary columns, brackets and optional column embellishments shall also be available.

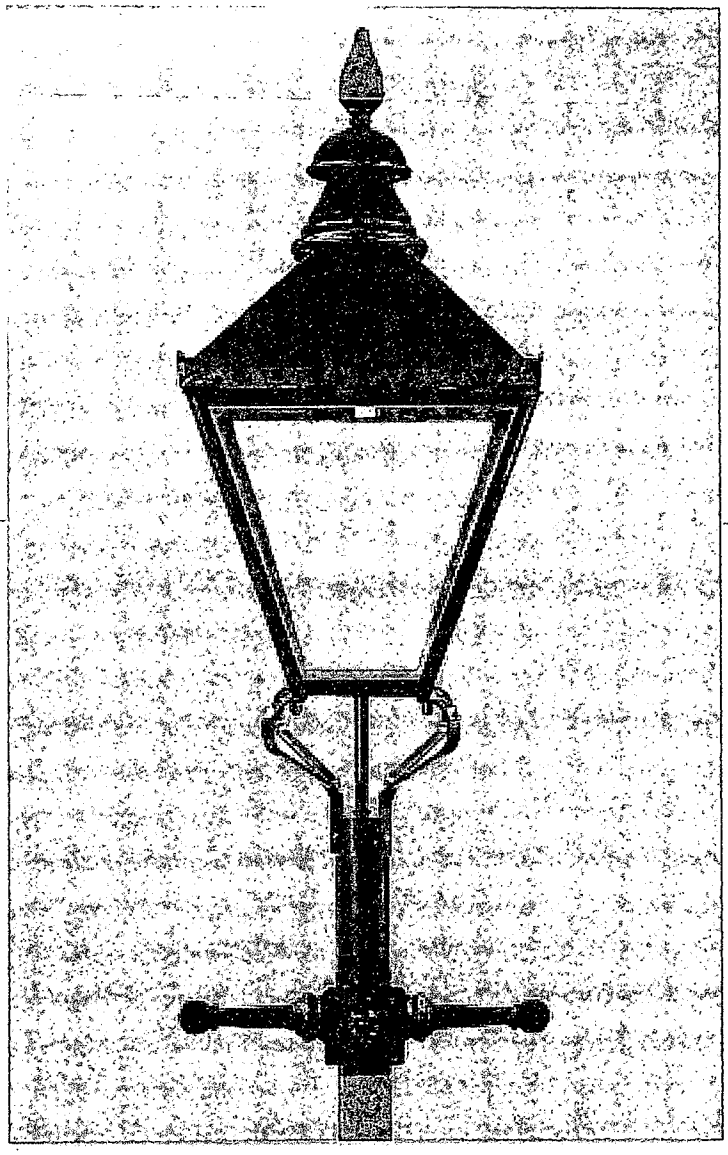

Dimensions (mm)



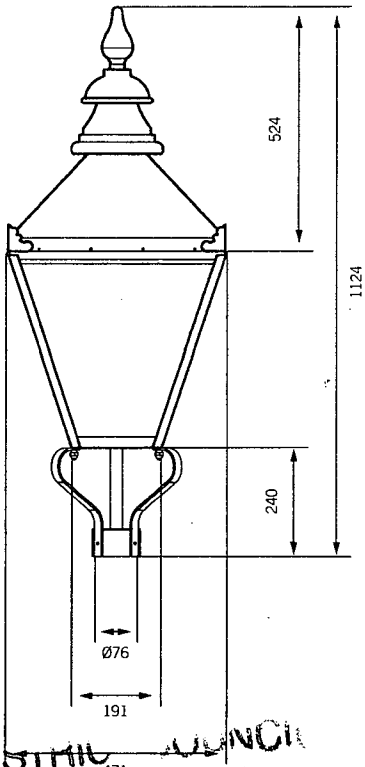

ADUR DISTRICT COUNCIL
PLANNING DIVISION
PLAN No. Ar0d027967
DATE RECEIVED 10 MAY 2007

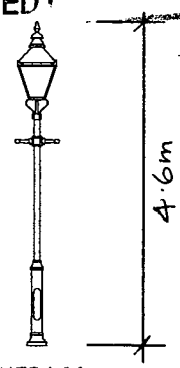

SHEB4.1A

CARDEN & GODFREY
Architects
Carden & Godfrey Limited
33 Clerkenwell Close
London EC1R 0AU
Telephone 020 7490 0300
Facsimile 020 7490 0004

ST MARY DE HAURA, SHOREHAM
PROPOSED CHURCHYARD LIGHTS
NTS. 4·2007 40147/8/4

© Carden & Godfrey Ltd own the copyright of this drawing and design which must not be reproduced in whole or part without the written permission of Carden & Godfrey Ltd.

Hobs Reprographics London 69

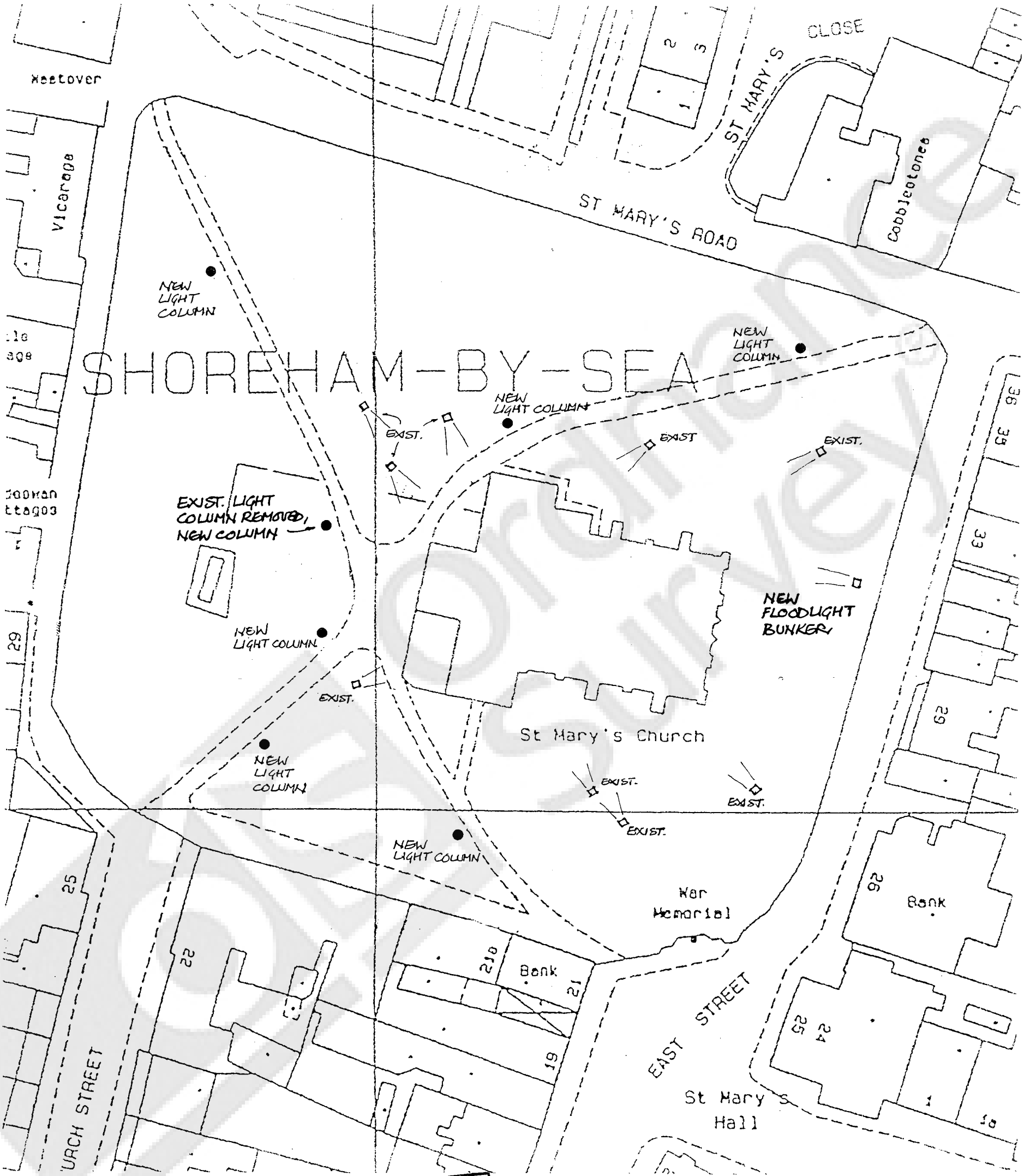

ADUR DISTRICT COUNCIL
PLANNING DIVISION
PLAN No. Rec'd/a/c?
DATE RECEIVED 10 MAY 2007

CARDEN & GODFREY
Architects
Carden & Godfrey Limited
33 Clerkenwell Close,
London EC1R 0AU
Telephone 020 7490 0300
Facsimile 020 7490 0004

ST MARY DE HAURA, NEW SHOREHAM
NEW LIGHTING : LOCATION PLAN
1:500 4·2007 40147/8/2

Hobbs Reprographics London 263