SECTION 1

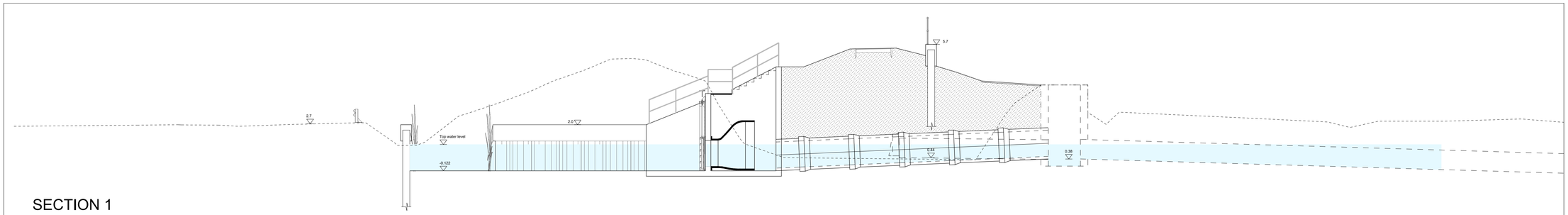


SECTION 2

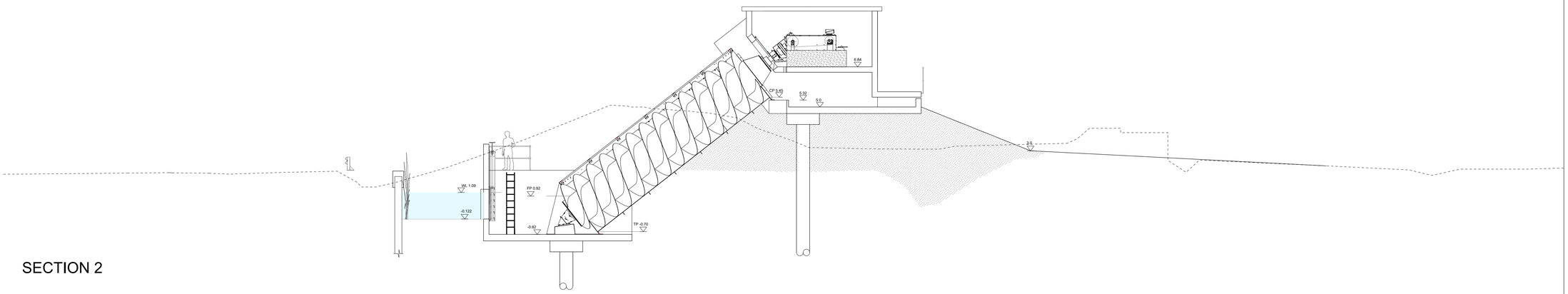


PLAN

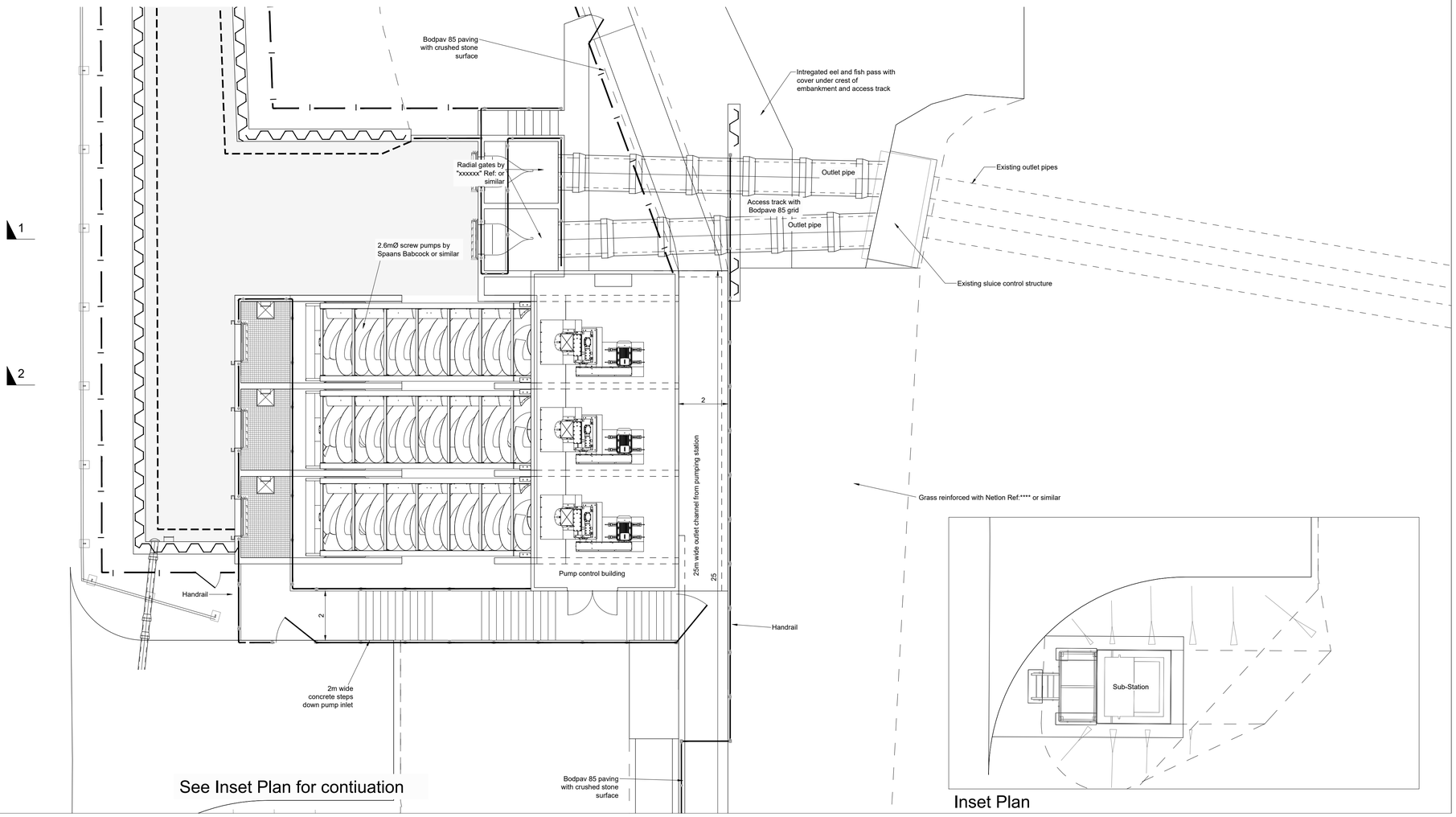





Inset Plan

NOTES:

1. All dimensions to be checked on site. All details and dimensions relating to sub-Contractors work must be checked and agreed between the sub-Contractor or supplier and the general Contractor.

2. This drawing is to be read in conjunction with all relevant Architect's and Engineer's drawings and specification.

3. The main Contractor is responsible for ensuring the stability of the structure whilst the works are in progress.

4. Any information given regarding existing underground services is given in good faith after consultation with the relevant authority. No liability is accepted by the Consultant and the main Contractor is responsible for obtaining and checking all information and taking due care and attention whilst undertaking the works.

| REV | DATE | INT | DESCRIPTION | CHK |
|---|---|---|---|---|
| C | 12.10.20 | MJP | Drawing updated | |
| B | 20.03.17 | AJD | Building height revised | |
| A | 14.03.17 | AJD | Drawing updated | |

Issue Status: PLANNING


11 Tungsten Building
George Street
Fishersgate
Sussex
BN41 1RA
Tel: 01273 424424
Fax:01273 424425
email: design@civil.co.uk

the civil engineering practice


CLIENT: New Monks Farm Development Ltd

PROJECT: New Monks Farm
Lancing

TITLE: Proposed Surface Water Pumping Station

| DRAWN | DATE | PROJECT NO. |
|---|---|---|
| A Davies | Feb 2017 | 22236 |
| ENGINEER | CHECKED | ORG. No. / REV. |
| G Waller | | 2258 C |

SCALE: 1:100 @ A1, 1:200 @ A3