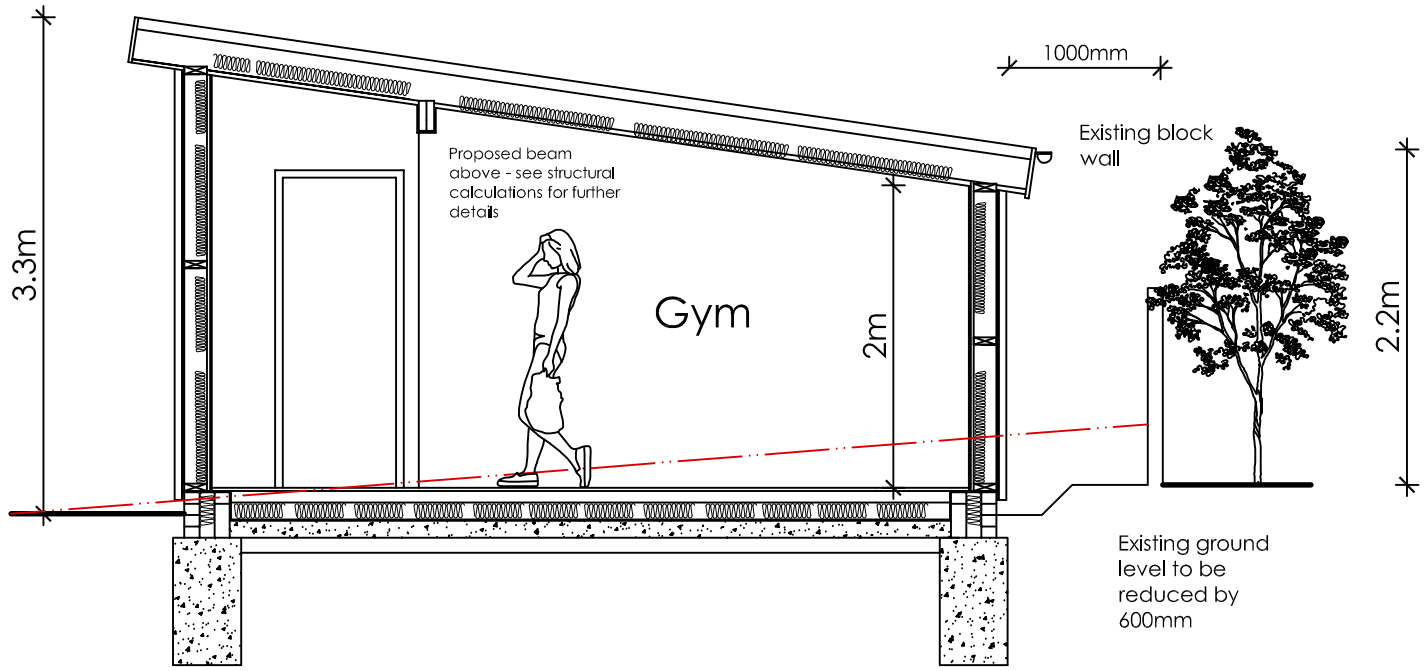

PROPOSED SECTION 1:50

0m 1m 2m 3m 4m 5m

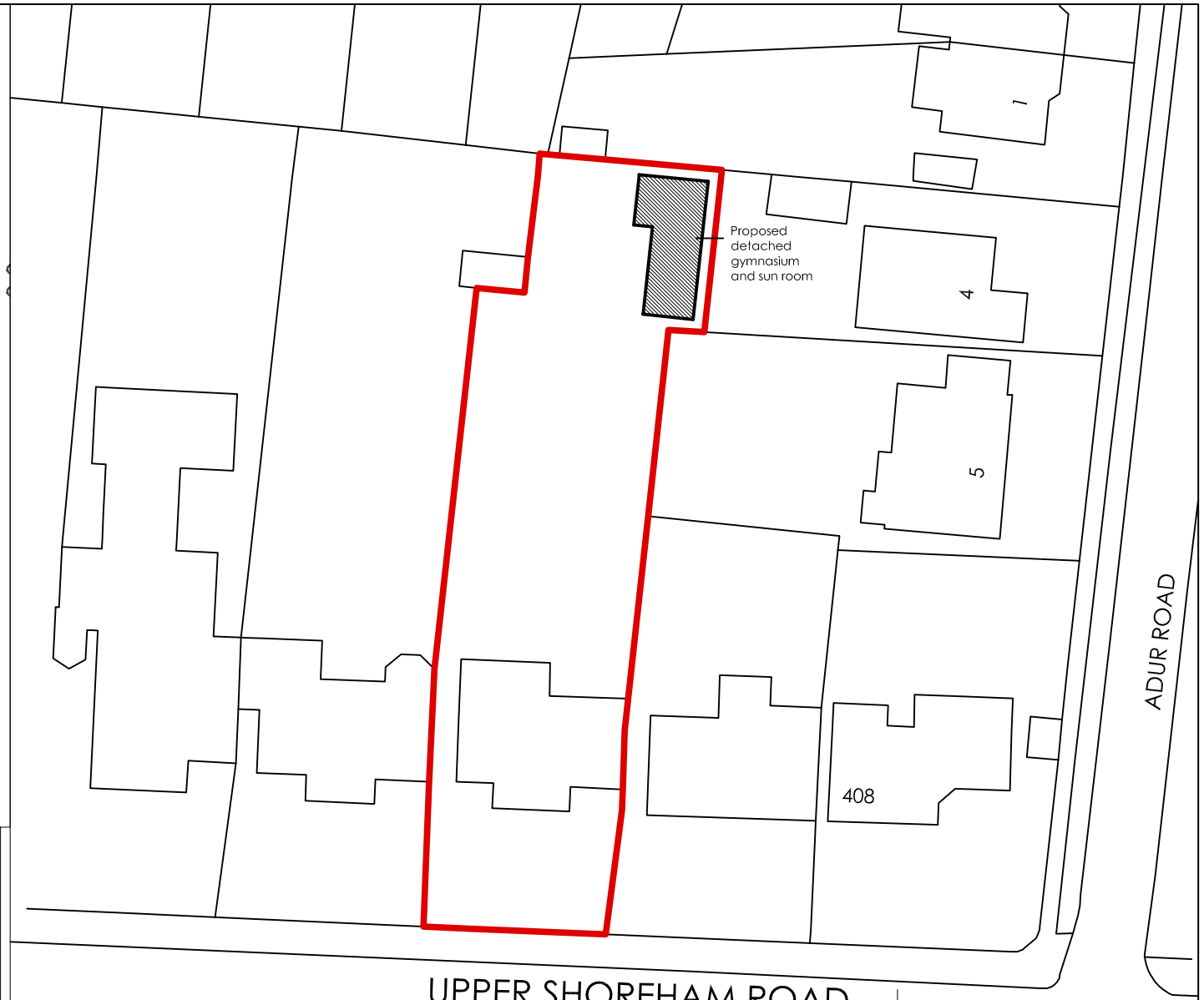

SITE PLAN 1:500

10 0 10 20

metres

N

Ordnance Survey
Ukmapcentre.com



LOCATION PLAN 1:1250

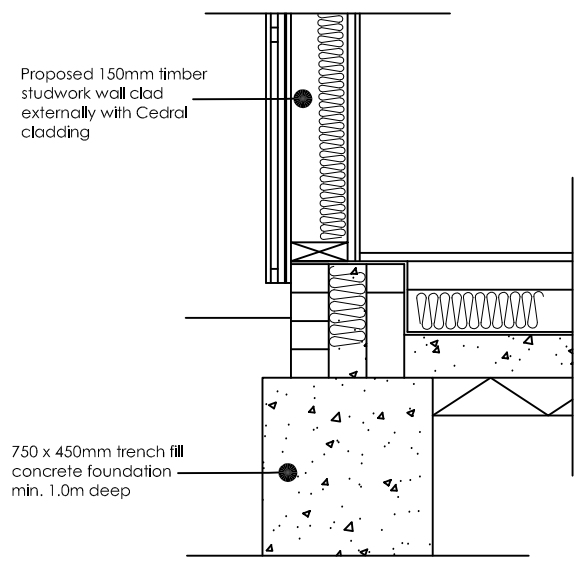

Floor / Wall Detail 1:20

REVISIONS:

25th June 2019 - Building moved 1m away from north and east boundary's. Ground level to be reduced by 600mm up the slope and levelled.

Notes:

1. Do not scale from these drawings. (Unless for Planning purposes)
2. Drawings to be read in conjunction with the structural calculations and the building notes provided.
3. These drawings are for Building Control approval only.
4. The client / contractor is advised to read the separate notes and the details provided in the structural calculations regarding the CDM regulations.
5. The property owner is reminded to serve a Party Wall Notice on any adjoining owner should they need to do so under the requirements of the Party Wall Act 1996.
6. No work should be undertaken until all consents (Planning and Building Control) have been received and approved in writing. Any work undertaken without consent is done so at the clients risk.

ama
atterbury moore associates
architectural & quantity surveying serivices
Unit 1 Gosling Croft Business Park
Long Furlong
Clapham Worthing
West Sussex BN13 3UT
01903 871131
carl@atterburymoore.co.uk

Address of works:	412 Upper Shoreham Road, Shoreham
Drawing title:	Proposed detached garden building

Date:	Scales:	Paper size:	Dwg No:
April 2019	As shown	A3	AD-186-04