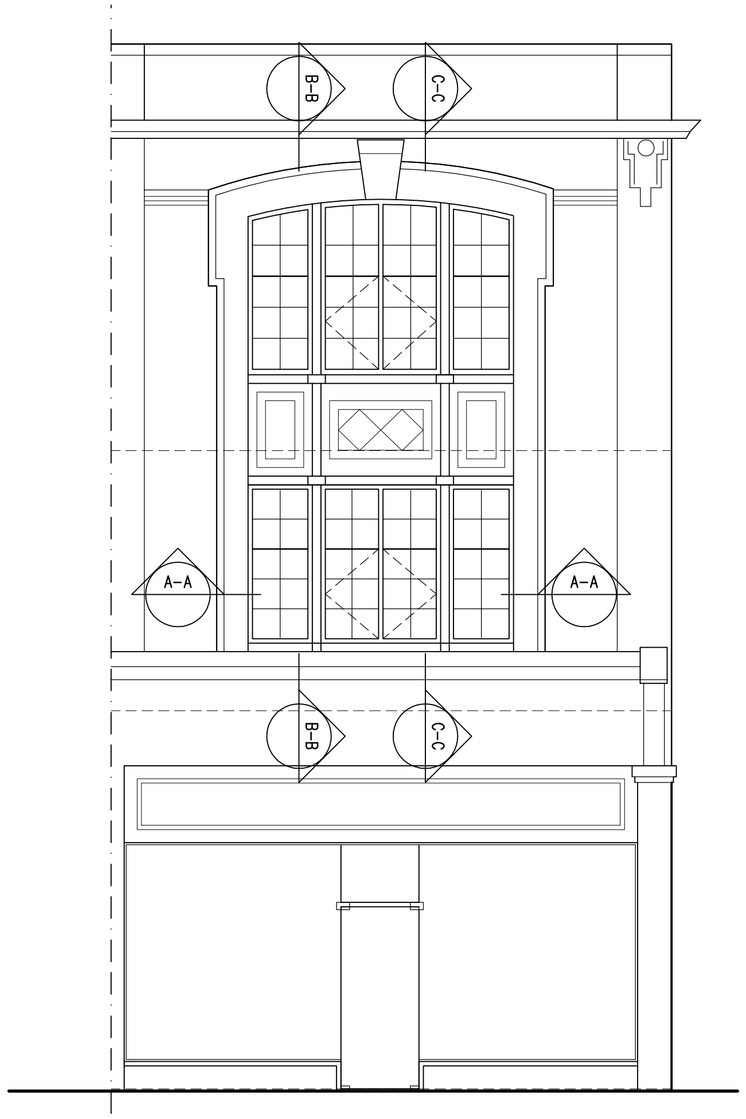

Front Elevation
As Proposed
1:50

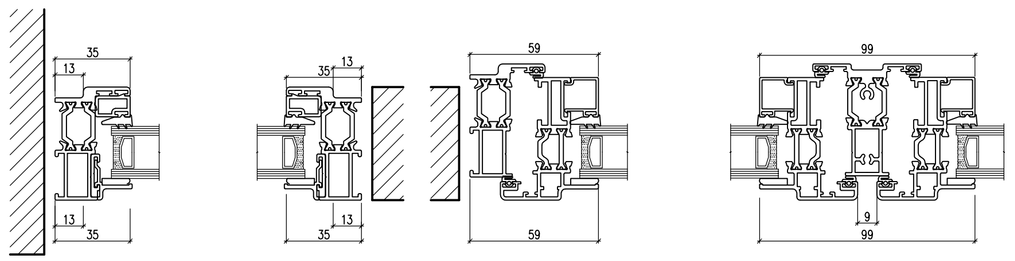

Fixed Lite | Fixed Lite | Opener | Two Openers With Transom

Section A–A
1:2

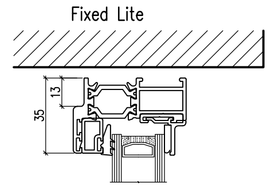

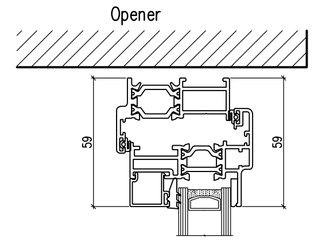

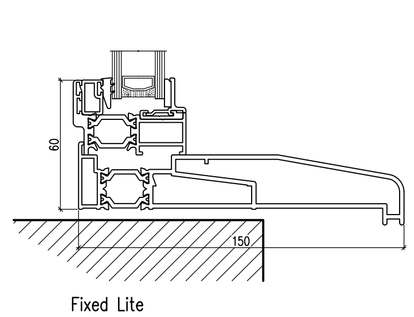

Fixed Lite

Section B–B
1:2

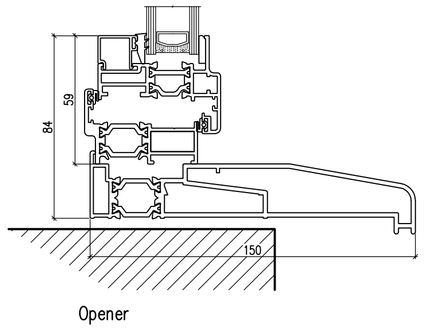

Opener

Section C–C
1:2

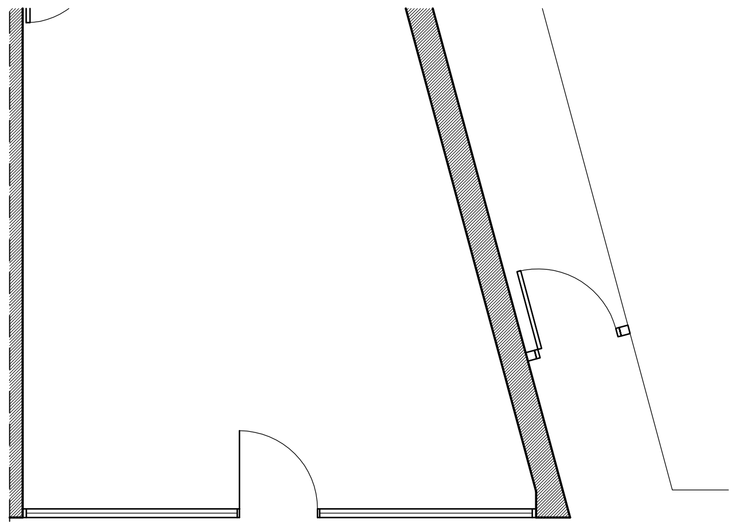

Ground Floor Plan
As Proposed
1:50

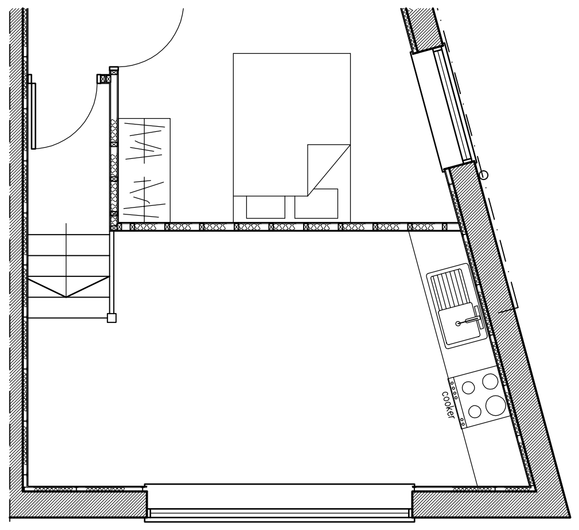

First Floor Plan
As Proposed
1:50

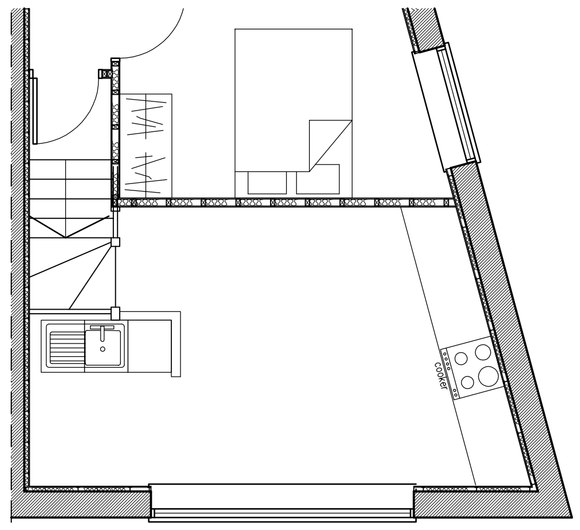

Second Floor Plan
As Proposed
1:50

1m 2m 3m 4m 5m
1:50 Scale Bar

A | April 2024 | Dims added to details

Project:
Replacement Window at:
13 Montague Street
Worthing

Drawing title:
Floor Plans & Elevations
As Proposed

Client:
Geneva Investment Group

Copyright of:
Clive Voller Associates
Chartered Building Surveyors
15 Station Road
Burgess Hill
West Sussex
RH15 9DE
Tel: 01444 871010
Fax: 01444 870099
Web: www.clivevoller.com
RICS

Scale:
1:50, 1:2 @ A1

Date:
March 2024

Drawn:

Drg. No.
4092-02

Rev'n
A