General Notes:

Do not scale dimensions from this drawing, unless for Planning purposes.

The Contractor is responsible for checking all dimensions on site prior to commencement of the works.

This drawing is to be read in conjuction with the specification.

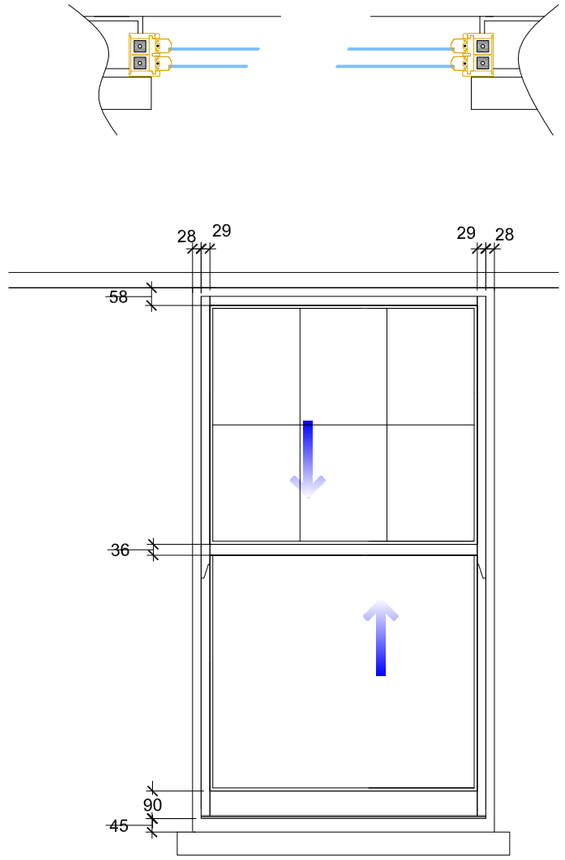

EXISTING WINDOW DETAILS - single glazed

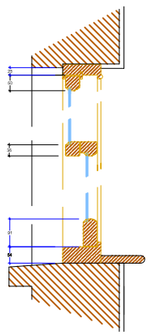

Existing Section

EXISTING WINDOWS 2 & 3, 7, 8, 9, 11, 12 , 13, 14, 15, & 16 ALL REPLACED AS ABOVE TO VERTICAL SLIDING SASHES FROM THE LEGACY RANGE.

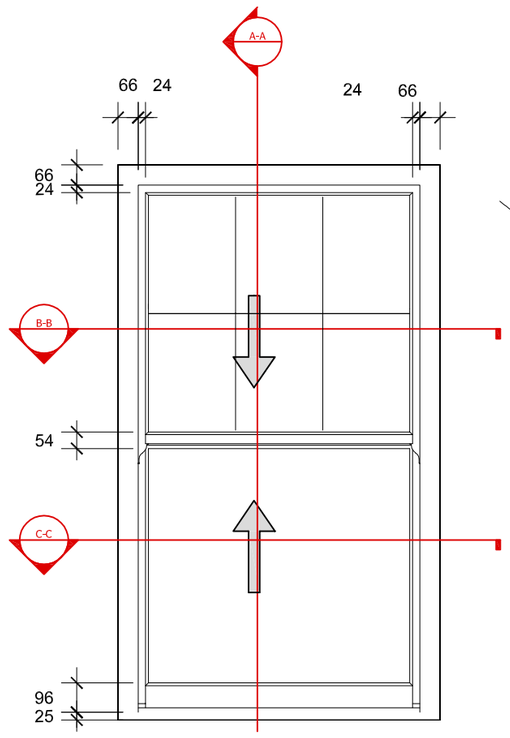

PROPOSED WINDOW DETAILS - PVC DOUBLE GLAZED VERTICAL SLIDING WINDOWS.

Window frames set back behind existing masonry to show similar profile as existing

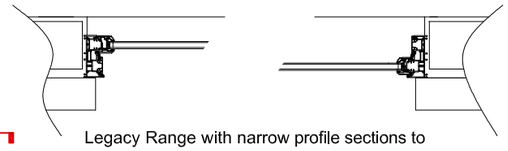

Legacy Range with narrow profile sections to face front, to match existing elevations

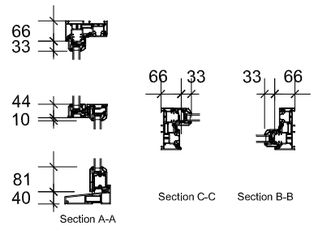

Brian Elstone Surveying Services Ltd
Brian Elstone, MCIOB, IMaPS, MCABE
Building Surveyor and Architectural Consultant
CDM Consultant

1 Herne Court, Station Road, Rustington,
West Sussex, BN16 3BQ
Phone: 01903 784884, Mobile: 07710 593021.
Email: brian@elstone.biz

Client:
Mr T. Scott, 16 Longfellow Road, Worthing, BN11 4NU.

Project:
Replacement windows.

Drawing Title:
Replacement windows sheet 1

Revision	Date	Description

Scale:	Date:	Drawn By:
1:20	16/07/2024	BE

Drawing Number:	Revision:
1655/003	-