General Notes:

Do not scale dimensions from this drawing, unless for Planning purposes.

The Contractor is responsible for checking all dimensions on site prior to commencement of the works.

This drawing is to be read in conjuction with the specification.

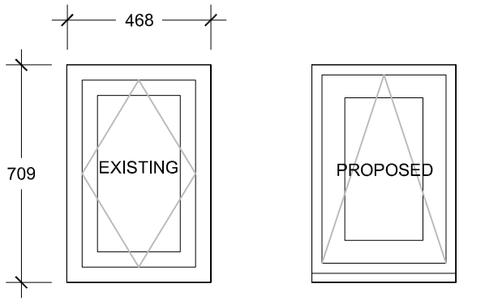

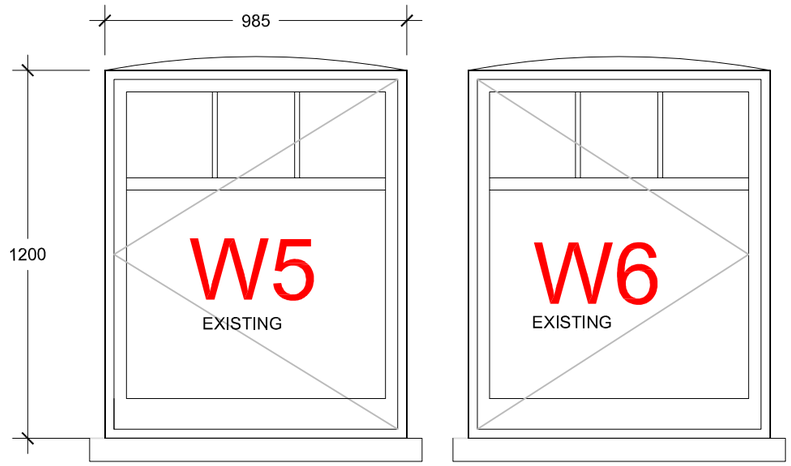

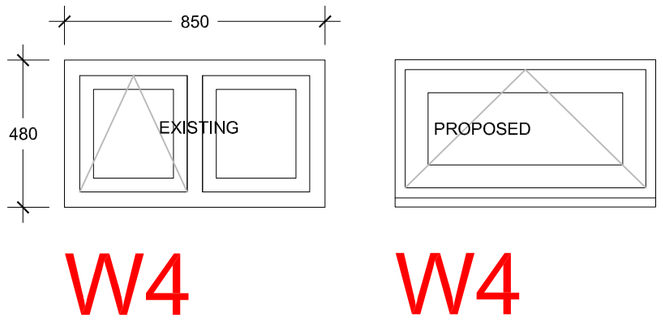

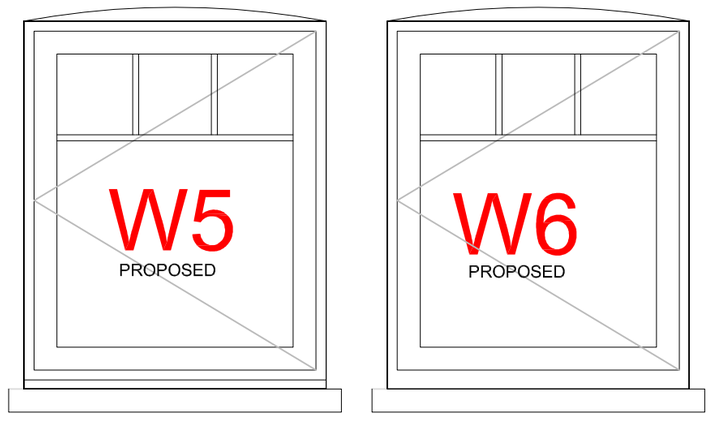

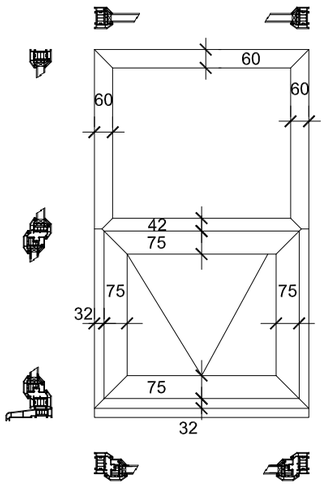

Standard Detail for Proposed PVC Double glazed windows Rehau Total 70 Range

EXISTING WINDOWS 4, 5, 6 & 10 TO BE REPLACED
WITH PVC CASEMENT WINDOWS REHAU TOTAL 70 RANGE

Brian Elstone Surveying Services Ltd
Brian Elstone, MCIOB, IMaPS, MCABE
Building Surveyor and Architectural Consultant
CDM Consultant

1 Herne Court, Station Road, Rustington,
West Sussex, BN16 3BQ
Phone: 01903 784884, Mobile: 07710 593021.
Email: brian@elstone.biz

Client:
Mr T. Scott, 16 Longfellow Road, Worthing, BN11 4NU.

Project:
Replacement windows.

Drawing Title:
Replacement Windows, sheet 2

Revision	Date	Description

Scale:	Date:	Drawn By:
1:20	16/07/2024	BE

Drawing Number:	Revision:
1655/004	-