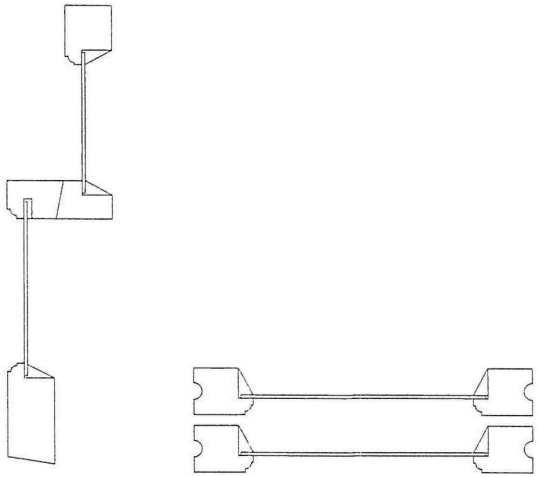

Existing

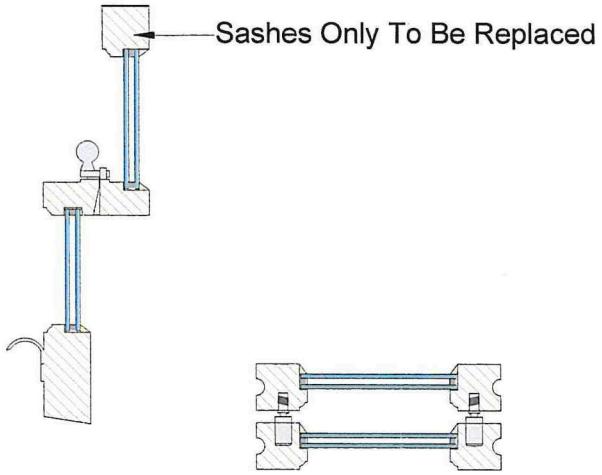

Proposed

Windows C & D (east elevation)

Scale Bar 1:5

0 100 200mm

Drawing Issued For:	Project:	Client Ref:	Drawing Title:	Date:12/08/2024	Revision No.:	Drawing by:	
Planning Permission	Flat 10 Jason Court Wordsworth Road Worthing West Sussex BN11 3LQ	L24712 Parsons	Existing and Proposed Sash Replacement Sections	Scale: 1:5 A3	1.3	Charlie Cole charlie.cole@wandsworthsashwindows.com	