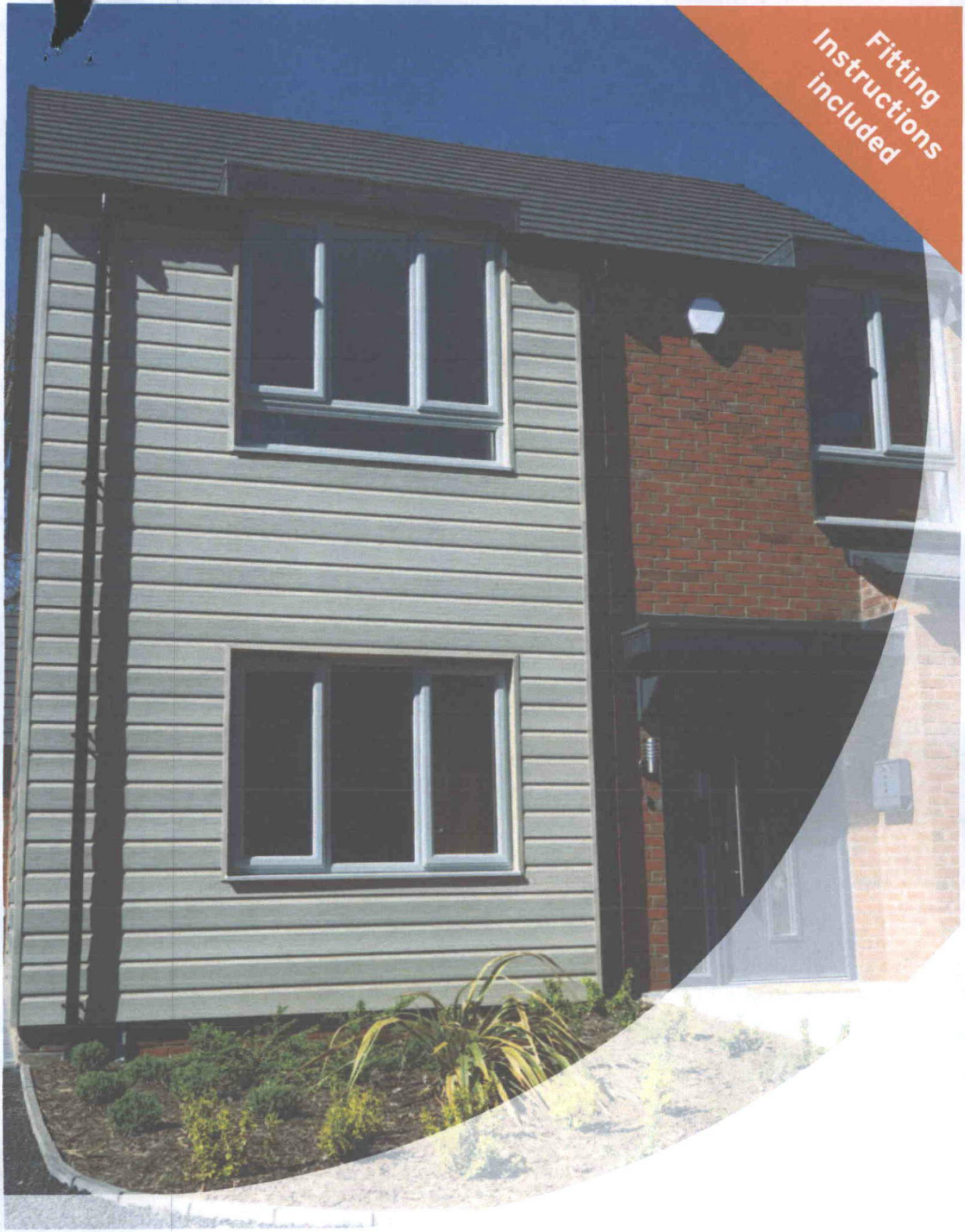

The Complete Cladding Solution

Freefoam
Building Products



Contents

Introduction: The Complete Cladding Solution	3
Shiplap and Open V Cladding	4
Woodgrain Shiplap and Open V Cladding	5
Fortex Embossed Cladding: Double Shiplap	6
Weatherboard	7
X-Wood Cladding	8
Fitting Accessories	9-10
Installation instructions	11-17
Maintenance	17
Technical Data	18

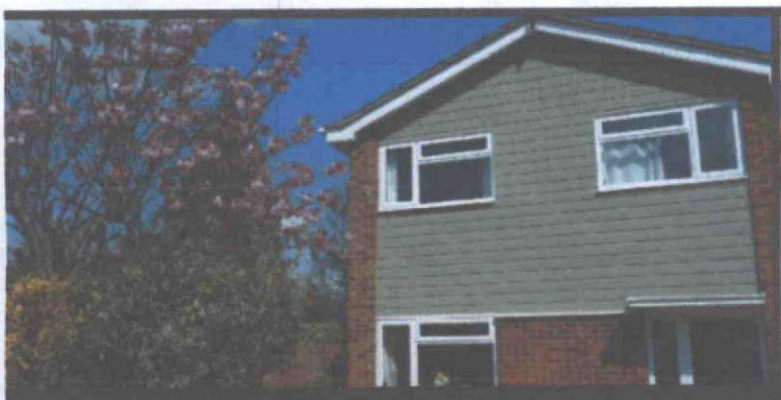

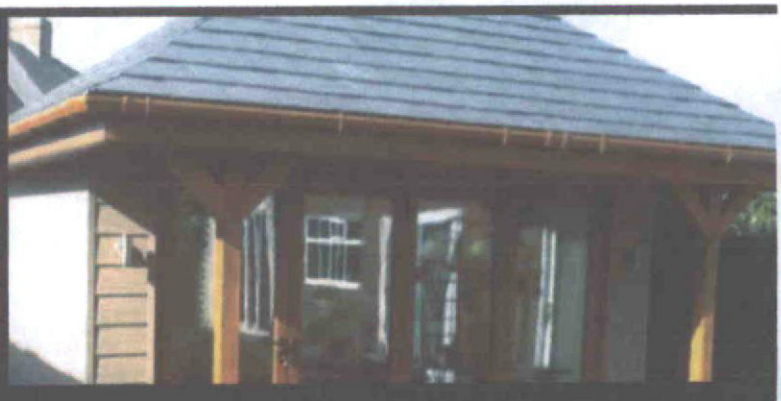

The Complete Cladding Solution

Freefoam manufacture a range of long lasting, low maintenance cladding systems. Designed for high performance with high specification standards, Freefoam PVC-UE cladding is produced with our environmentally friendly lead free formulation, and guaranteed to stand the test of time.

Easy to install

All Freefoam cladding products are easy to fit. Both the standard PVC-U and Aluminium range of fitting trims ensure every installation is straightforward, designed to create a neat and professional finish.

Very low maintenance

PVC-UE is a very stable material. Cladding products made from PVC-UE do not require repainting or regular maintenance. A simple wipe-down with a damp cloth is all that's required to keep Freefoam cladding products looking their best. This offers a major long-term advantage over wood cladding saving time and money.



Cut heating costs with exterior cladding

With heating costs always a concern, fitting exterior wall cladding can provide the ideal solution to insulate your home. When installed with generic insulation materials, The Building Research Establishment's (BRE) 'Green Guide to Specification' has given PVC cladding an A+ rating.

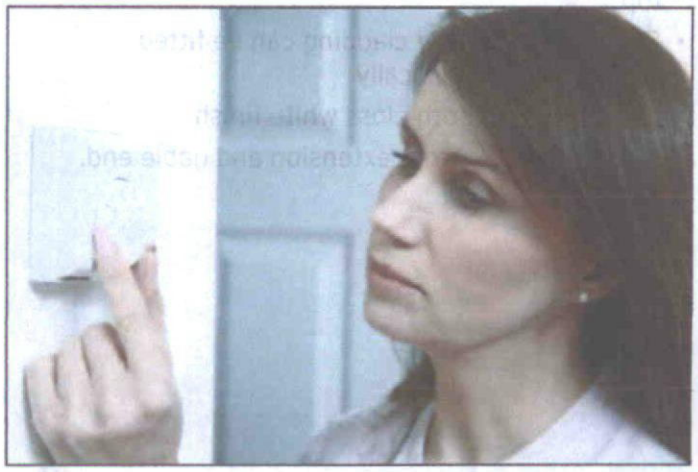

Versatile

Freefoam cladding can be used on all types of exteriors including brick, masonry and concrete. Suitable for a wide variety of projects and situations, offering an attractive facade for both traditional and contemporary projects.

- New Build projects, both domestic and commercial
- Feature wall on a home extension.
- Replace timber cladding with long lasting PVC-U
- Replace hanging tiles with cladding.
- Replace tired and cracked render with new PVC cladding.
- Garden room or home office.

Free Sample

Call: 0800 002 9903
Email: ukmarketing@freefoam.com

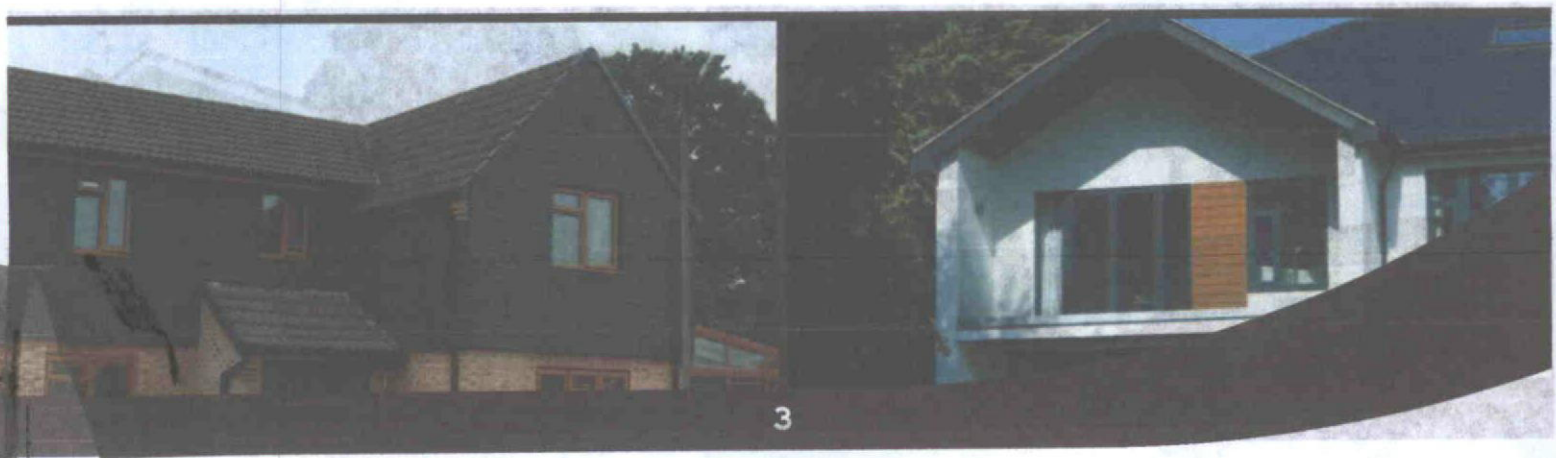

Shiplap and Open V Cladding

As the name suggests, shiplap cladding earned its name from the way ships were built in the past.

- Shiplap and Open V cladding have a rebate at the bottom of the plank and a scalloped profile at the top.
- Shiplap and Open V cladding can be fitted horizontally or vertically
- Available in smooth gloss white finish
- Ideal for dormer roof extension and gable end.

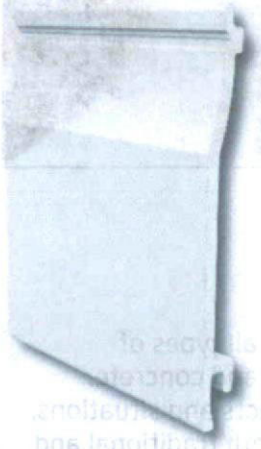

FC151 Shiplap

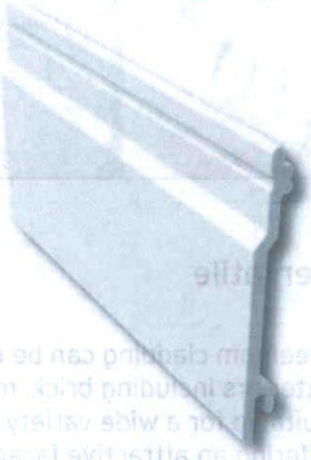

FV100 Open V

Colour Range



White

Nearest RAL 9003

Guaranteed to stay white

Prolonged exposure to Ultra Violet (UV) light from the sun can damage our skin - and it has the same effect on PVC causing it to degrade over time. Freefoam white cladding is manufactured using a natural mineral called titanium dioxide - the same product is used in sun cream! It guarantees white cladding products to stay bright white for up to 10 years.

LEAD FREE **10 year guarantee**

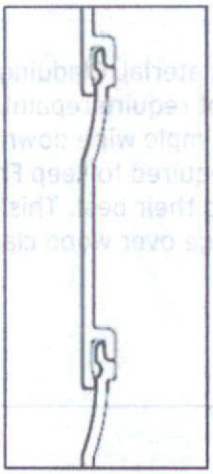

Profile of fitted boards (FC151)

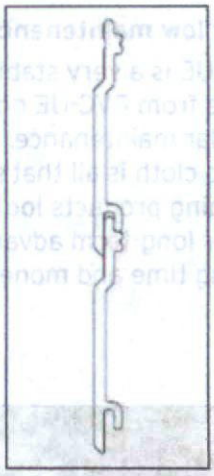

Profile of fitted boards (FV100)



Woodgrain Shiplap and Open V Cladding

Woodgrain finish cladding is suitable for both new installations and refurbishment, including feature walls and dormer extensions. Match to PVC woodgrain fascia, windows and doors.

- Available in two widths, 151mm and 100mm
- Wide colour range

Manufactured to last
Freefoam work with world leading woodgrain film manufacturers for all woodgrain cladding to provide a durable fade resistant product.

The film features technologies in the base film to prevent the build up of heat, reducing the surface temperature. The upper transparent layer helps prevent fading and improves weather resistance.

This technology allows Freefoam to offer a ten year guarantee on all woodgrain cladding products.

LEAD FREE **10 year guarantee**

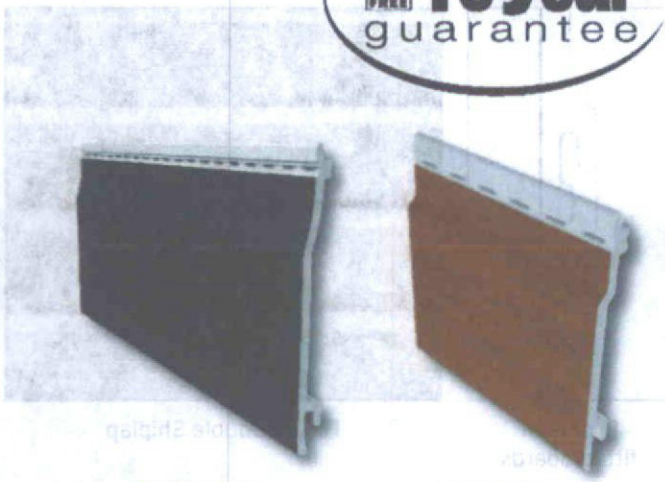

FC151 Shiplap FV100 Open Vee

Colour	Code	FC151	FV100
Anthracite Grey	WGAG	●	
Black Ash	WGB	●	●
Mahogany	WGM	●	●
Light Oak	WGO	●	●
Rosewood	WGR	●	●

Woodgrain Shiplap and Open Vee Cladding Range



Anthracite Grey
Nearest RAL 7016

Black Ash
Nearest RAL 8515

Mahogany

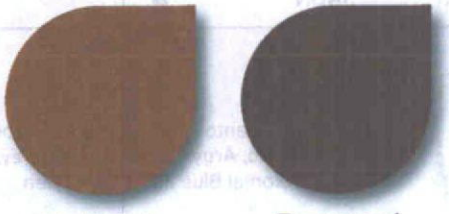

Light Oak **Rosewood**

Free Sample

Call: 0800 002 9903
Email: ukmarketing@freefoam.com

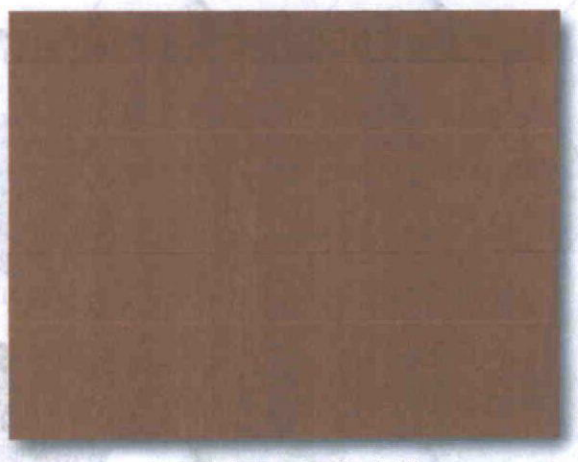

Detail of Woodgrain finish
(Light Oak finish pictured)

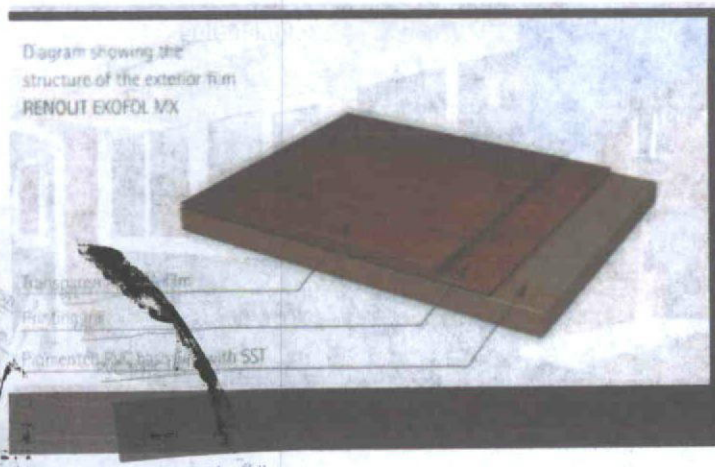



Fortex Embossed Cladding

FORTEX®

Fortex® is a range of innovative exterior PVC cladding products that features an authentic embossed wood effect finish.

Two profiles:

- Double Shiplap
- Weatherboard

Superior Durability

The Fortex® cladding range is manufactured as a long-term decorative cladding solution, designed to withstand weather and external conditions.

Guaranteed for up to 10 years*, backed by Freefoam's environmentally friendly lead-free formulation.

Double Shiplap

One board with a Shiplap design, covers large areas quickly. Avaiable in two sizes.



FCD333E Double Shiplap



FCD300E Double Shiplap

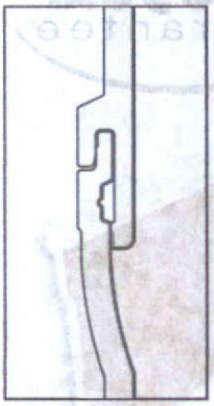

Profile of fitted boards



Fortex Double Shiplap

Fortex Embossed PVC-U Cladding Range



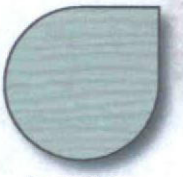

Sage Green

Colour	Code	FCD333E	FCD300E
White		●	●
Pale Gold	PG	●	●
Sand	SAND	●	●
Misty Grey	MG	●	
Storm Grey	SG	●	
Colonial Blue	CLB	●	
Cappuccino	CAP	●	
Argyl Brown	AB	●	
Slate Grey	SLG	●	
Sage Green	SAGN	●	

* 5 year guarantee applies to dark colours, Cappuccino, Argyl Brown, Storm Grey, Slate Grey, Colonial Blue and Sage Green

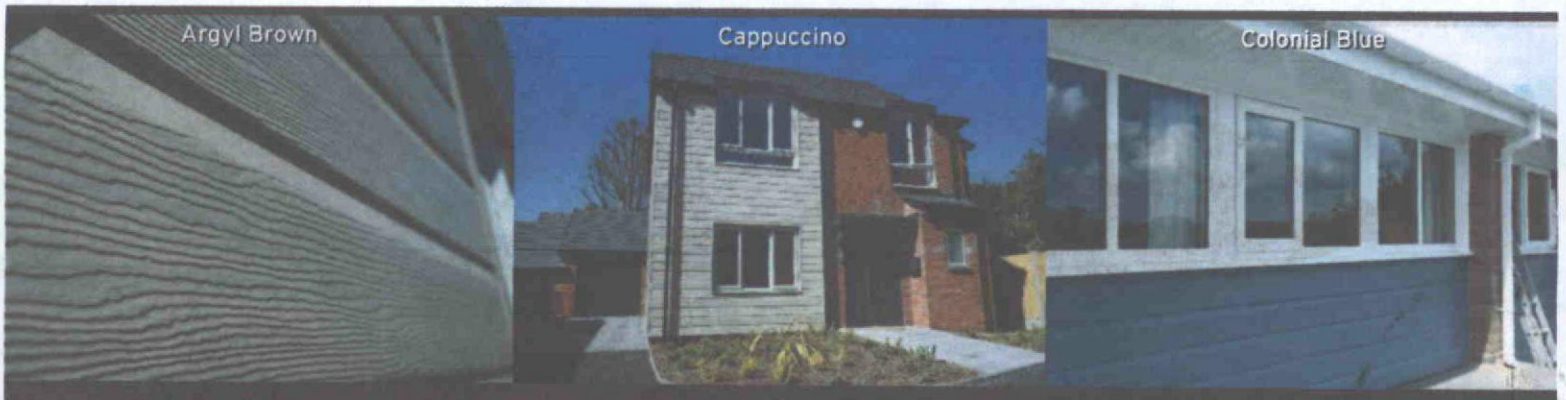

Weatherboard

FORTEX®

Weatherboard cladding, sometimes known as featheredge cladding, features a tapered board. Designed to be laid with an overlap to create a 'New England' look.



FCF170E Weatherboard

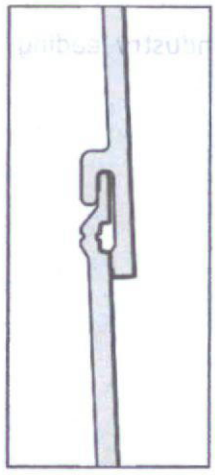

Profile of fitted boards



Fortex Weatherboard

Weatherboard Range



Colour	Code	FCF170E
White		●
Pale Gold	PG	●
Sand	SAND	●
Misty Grey	MG	●
Storm Grey	SG	●
Colonial Blue	CLB	●
Argyl Brown	AB	●
Slate Grey	SLG	●
Sage Green	SAGN	●
Pale Blue	PB	●

Free Sample

Call: 0800 002 9903
Email: ukmarketing@freefoam.com

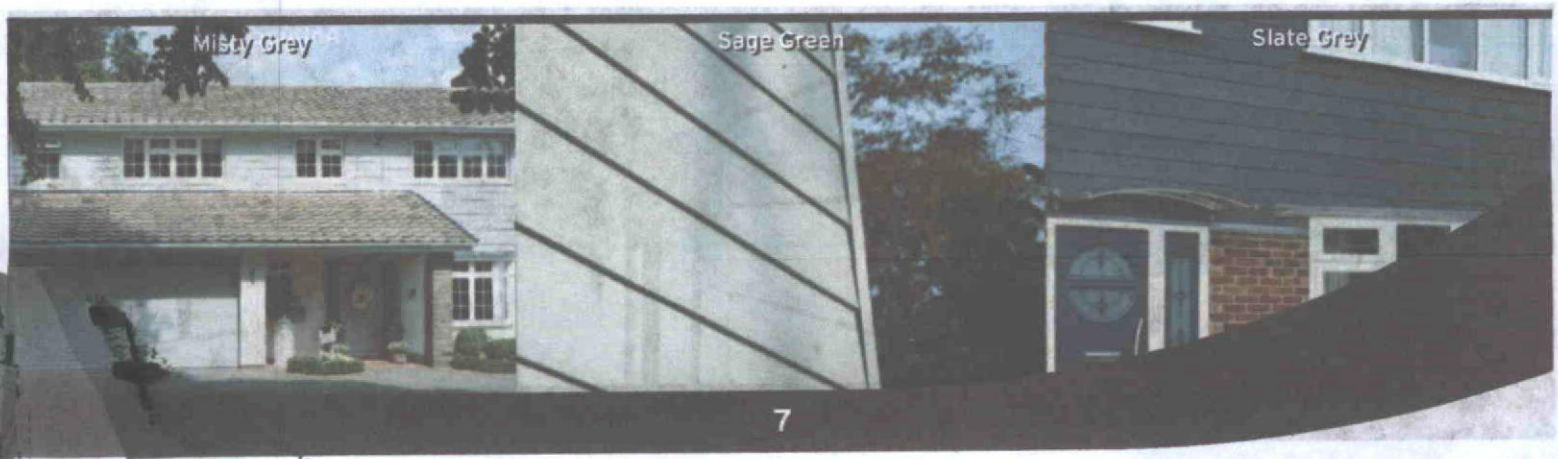

X-Wood Cladding

A highly durable composite cladding system that provides a contemporary attractive exterior façade. Perfect for any new build project or property renovation, X-Wood cladding is guaranteed to provide a weatherproof exterior for 10 years.

- 16mm thick board
- Smooth woodgrain finish featuring industry leading Renolit film
- Aluminium fitting trims

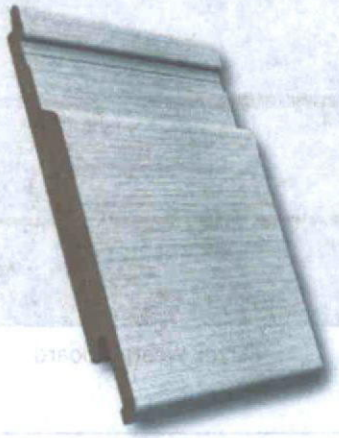

FCV143 X-Wood Cladding

X-WOOD CLADDING

- Heavy duty plastic foam core
- A durable solid plastic skin
- A superior coating from market leading Renolit colour film manufacturer featuring a woodgrain effect finish
- X-Wood is guaranteed for 10 years and offers an attractive contemporary look

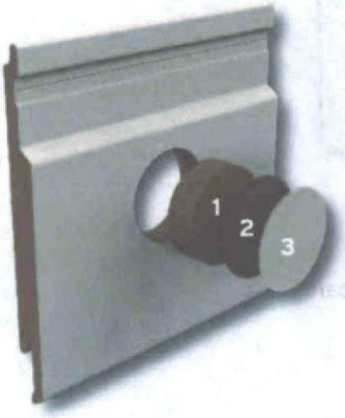

10 year guarantee

1 Heavy Duty Core
2 Durable Solid Plastic Skin
3 Renolit® Colour Film

X-Wood Cladding Range



Colour	Code	FVC143
Cream White	WGCR	●
Wine Red	WGWR	●
Greyed Cedar	WGGC	●
Anthracite	WGAG	●
White	WGW	●
Oak	WGO	●



Detail of X-Wood finish
(Anthracite Grey finish pictured)

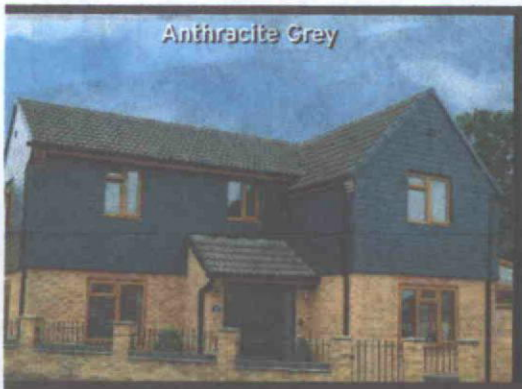



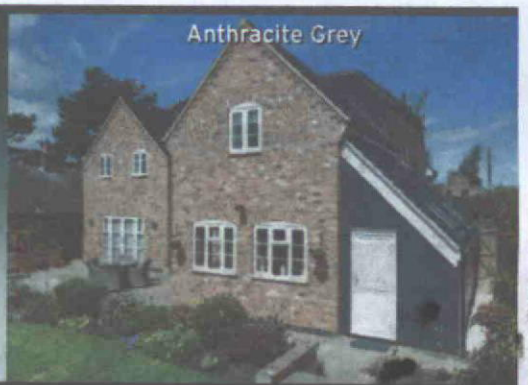

Fitting Accessories

Shiplap, Open V, Double Shiplap and Weatherboard PVC



FC3013/FC301E3
2 Part Edge Trim



FC3023/FC302E3
Universal Edge Trim



FC3043/FC304E3
2 Part External Corner Trim



FC3153/FC315E3
2 Part H Trim



FC3123
25mm Multi Vent Starter Trim



FC311E3
25mm Multi Vent Starter Trim/Cover Trim



FC206
Dip Trim

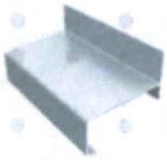

FCA3063
Aluminium Dip Trim



FC307E3
2 Part Internal Corner Trim



FCF2123
Starter Trim



FC318E3
Reveal Liner, 'H' Edge/ Extension Trim

FC319E3
2 Part Reveal Liner



FC210
Butt Joint, Shiplap



FCD210E
Butt Joint, 333mm Double Shiplap



FCF209E
Butt Joint, Weatherboard



FV209
Butt Joint, Open V

FCD209E
Butt Joint, 300mm Double Shiplap



ACSS250
Cladding Screws

Shiplap and Open V

Code	Description	Unit	Per pack	White	Aluminium Grey	Mahogany (WGM)	Light Oak (WGO)	Black Ash (WGB)	Rosewood (WGR)	Anthracite Grey (WGAG)
FC210	150mm Shiplap Cladding Butt Joint	Piece	10	●		●	●	●	●	●
FV209	100mm Open V Cladding Butt Joint	Piece	10	●		●	●	●	●	
FC3013	2 Part Edge Trim	3m	5	●			●	●	●	●
FC3023	Universal Edge Trim	3m	5	●			●	●	●	●
FC3043	2 Part External Corner Trim	3m	5	●			●	●	●	●
FC3153	2 part H trim	3m	5	●			●	●	●	●
FC3123	25mm Multi Vent Starter Trim	3m	5						●	
FC311E3	25mm 2 part Multi Vent Starter/Cover Trim	3m	5	●						
FC206	Drip Trim	5m	5	●						
FCA3063	Drip Trim Aluminium	3m	6		●					
FCF2123	Starter Trim	3m	5	●						
FC319E3	2 Part Reveal Liner	3m	1	●						
FC318E3	Reveal Liner, 'H' Edge/Extension Trim	3m	5	●						
ACSS250	Cladding Screws	30mm	250							

Double Shiplap & Weatherboard

Code	Description	Unit	Per pack	White	Aluminium Grey	Anthracite Grey	Sand (SAND)	Pale Gold (PG)	Pale Blue (PB)	Cappuccino (CAP)	Argyl Brown (AB)	Misty Grey (MG)	Storm Grey (SG)	Slate Grey (SLG)	Colonial Blue (CBL)	Sage Green (SAGN)
FCD209E	300mm Double Shiplap Butt Joint	Piece	10	●			●	●								
FCD210E	333mm Double Shiplap Butt Joint	Piece	10	●			●	●		●	●	●	●	●	●	●
FCF209E	170mm Weatherboard Butt Joint	Piece	10	●			●	●	●		●	●	●		●	●
FC301E3*	2 Part Edge Trim	3m	5	●			●	●	●	●	●	●	●	●	●	●
FC302E3*	Universal Edge Trim	3m	5	●			●	●	●	●	●	●	●	●	●	●
FC304E3*	2 Part External Corner Trim	3m	5	●			●	●	●	●	●	●	●	●	●	●
FC307E3	2 Part Internal Corner Trim	3m	5	●			●	●	●	●	●	●	●	●	●	●
FC315E3*	2 Part 'H' Trim	3m	5	●			●	●	●	●	●	●	●	●	●	●
FC3123*	25mm Multi Vent Starter Trim	3m	5			●										
FC311E3	25mm 2 part Multi Vent Starter/Cover Trim	3m	1	●			●	●	●	●	●	●	●	●	●	●
FC206	Drip Trim	5m	5	●												
FCA3063	Aluminium Drip Trim	3m	6		●											
FCF2123*	Starter Trim	3m	5	●												
FC319E3	2 Part Reveal Liner	3m	1	●			●	●	●	●	●	●	●	●	●	●
FC318E3	H' Edge/Extension Trim	3m	1	●			●	●		●	●	●	●	●	●	●
ACSS250	Cladding Screws	30mm	250													

* Can be bought in single pack quantities.

X-Wood Aluminium and PVC Fitting Accessories:

2 part trim with PVC base and aluminium cover



FCA3013
2 Part 'U' Trim



FCA3023
'J' Trim



FCA3043
2 Part External Corner Trim



FCA3153
2 Part 'H' Trim



FCA3163
Cover trim for Vented Starter Trim



FC3123
PVC 25mm Multi Vent Starter Trim



FVC209
Butt Joint, X-Wood



FCA3123
Aluminium Starter Trim

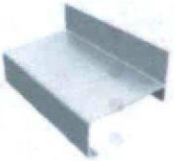

FCA3063
Aluminium Drip Trim



ACSS250
Cladding Screws

X-Wood

Code	Description	Unit	Per pack	Aluminium Grey	Anthracite Grey	White (WGW)	Cream (WGCR)	Oak (WGO)	Greyed Cedar (WGGC)	Wine Red (WGWR)	Anthracite Grey (WGAG)
FCV209	X-Wood (Woodgrain) Butt Joint	Piece	10			●	●	●	●	●	●
FCA3013	2 Part 'U' Trim	3m	5			●	●	●	●	●	●
FCA3023	'J' Trim	3m	5			●	●	●	●	●	●
FCA3043	2 Part External Corner Trim	3m	5			●	●	●	●	●	●
FCA3153	2 Part 'H' Trim	3m	5			●	●	●	●	●	●
FC3123	PVC 25mm Multi Vent Starter Trim	3m	5		●					●	
FCA3123	Aluminium Starter Trim	3m	5	●							
FCA3163	Cover Trim for Vented Starter Trim	3m	5			●	●	●	●	●	●
FCA3063	Aluminium Drip Trim	3m	6	●		●	●	●	●	●	●
ACSS250	Cladding Screws	30mm	250								

Cladding Installation

Installation Checklist

To be checked	✓
Correct screws used	
Screws do not puncture the cladding	
Sufficient expansion gaps allowed	
Correct batten size used	
Battens fixed at correct centres - see tables below	
Cladding screw fixed at every batten	
Ventilation profile installed at top and bottom	

Batten Size Guide : Shiplap, Open Vee, Double Shiplap and Weatherboard Cladding

Colour	White	Pale Gold	Sand	Colonial Blue	Argyl Brown	Storm Grey	Slate Grey	Misty Grey	Pale Blue	Sage Green	Cappuccino
Batten Size	25mm x 50mm	25mm x 50mm	25mm x 50mm	25mm x 50mm	25mm x 50mm	25mm x 50mm	25mm x 50mm	25mm x 50mm	25mm x 50mm	25mm x 50mm	25mm x 50mm
Batten Centre	400mm	400mm	400mm	400mm	400mm	400mm	400mm	400mm	400mm	400mm	400mm

Batten Size Guide : X-Wood Cladding

Colour	White	Cream	Greyed Cedar	Oak	Wine Red	Anthracite Grey
Batten Size	25mm x 50mm	25mm x 50mm	25mm x 50mm	37mm x 40mm	37mm x 40mm	37mm x 40mm
Batten Centre	400mm	400mm	400mm	400mm	400mm	400mm

Important Information

VENTILATION

Continuous ventilation from the bottom to the top of the installation is critical to the performance of the cladding. A minimum of 27mm ventilation space should be allowed between the cladding and the breather membrane, insulation or wall.

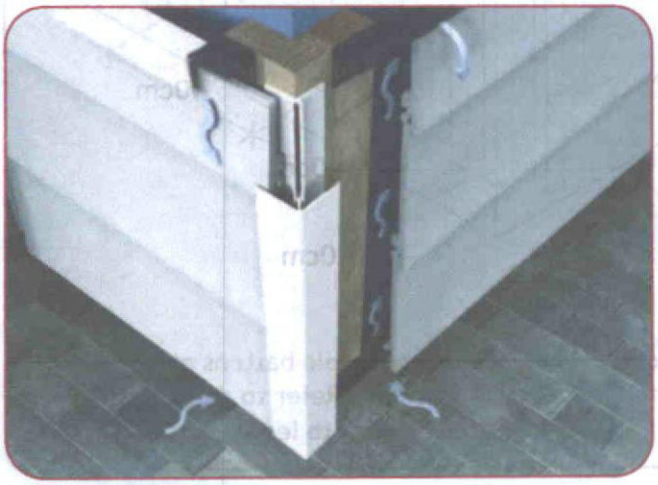

It is essential that continuous ventilation is maintained between the vertical battens from top to bottom and adequate expansion is allowed for at the ends of the boards.

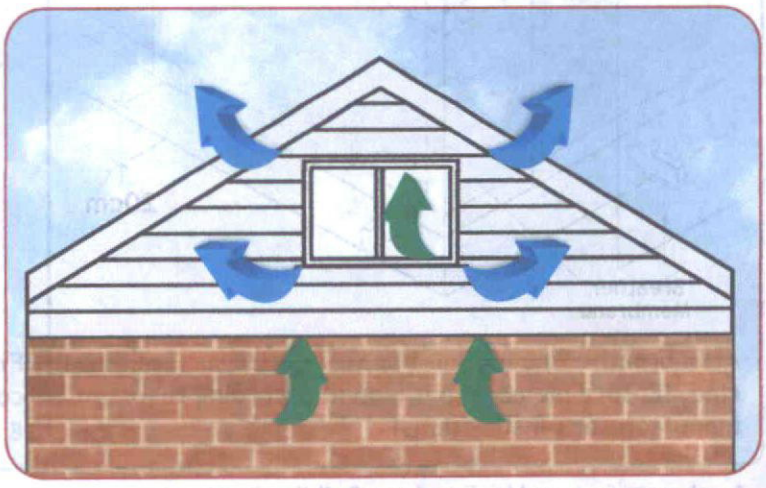

Green - Air Inlet • Blue - Air Outlet

Installation instructions

If no insulation is being fitted, continue to Figure 3

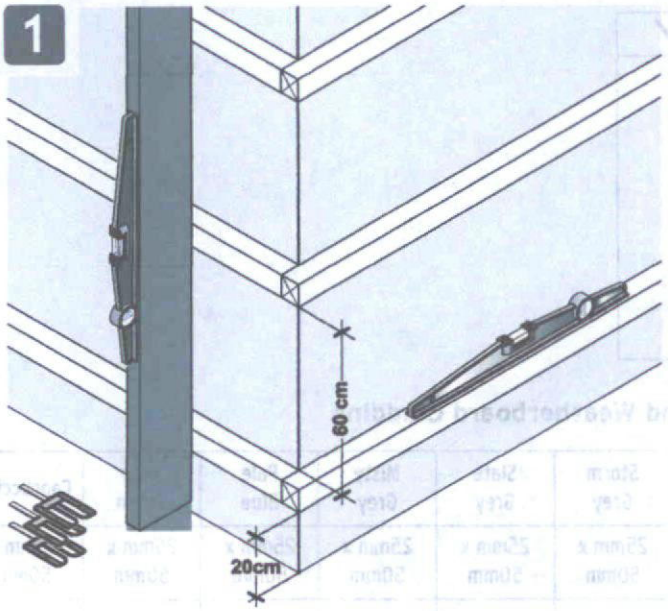

Affix softwood counter battens to suit chosen insulation in accordance with the spacings specified. Secure with suitable screws.

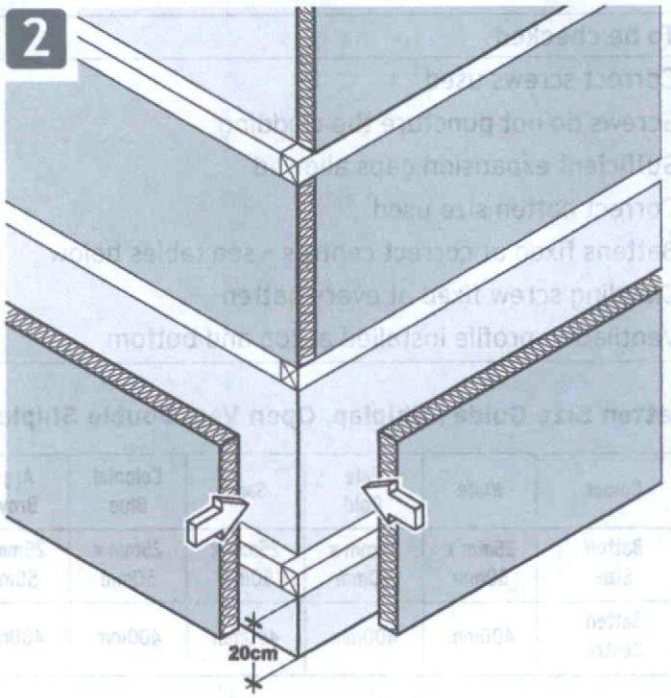

Place your thermal insulation between the counter battens with reference to insulation manufacturers instructions.

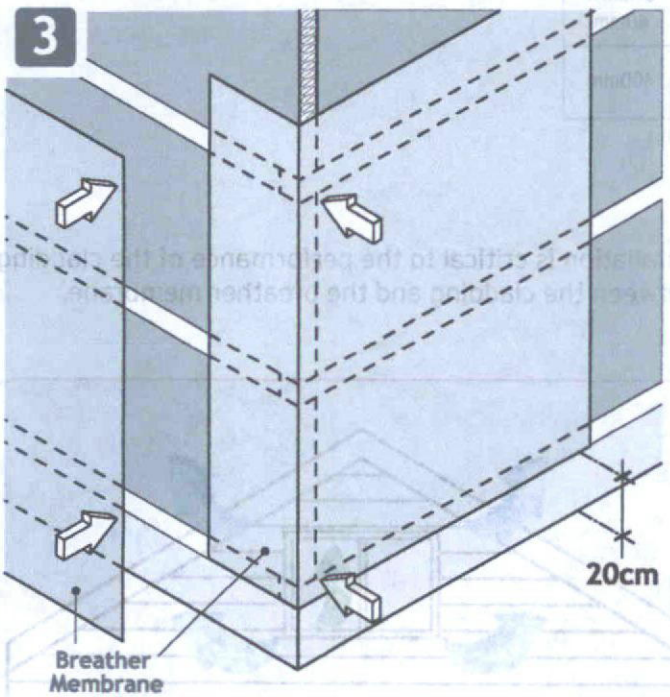

Affix breather membrane* to cover entire surface to be clad. (Ensure membrane is lapped according to manufacturer's instructions)

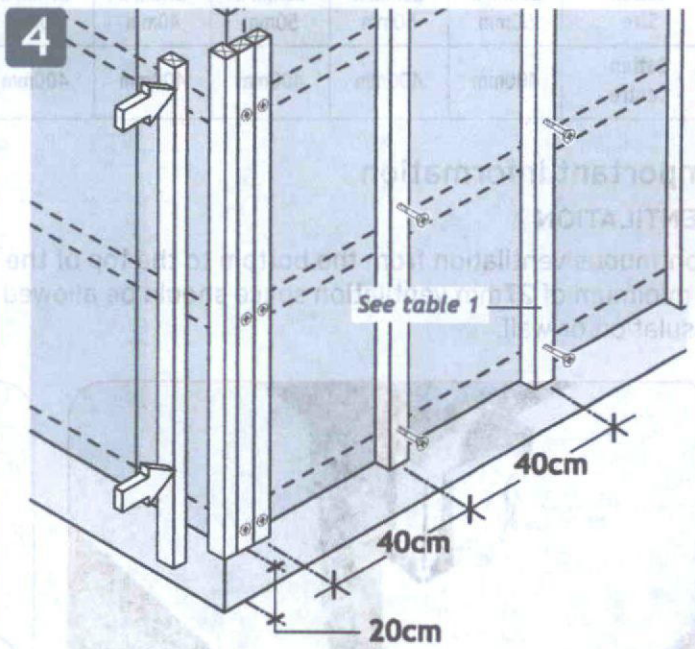

Fix cladding battens; Use double battens at corners,edges and junctions. Refer to diagrams 5, 6, 7, 8 & 15 before cutting battens to length.

*** not manufactured by Freefoam Building Products**

5

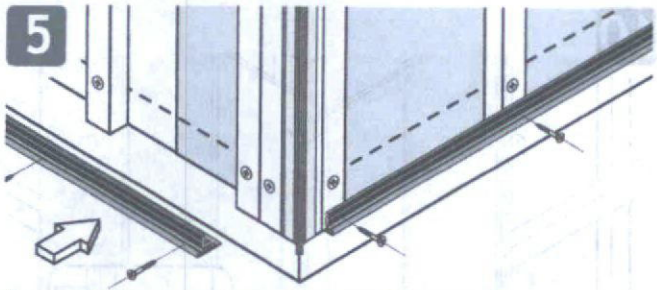

Fix ventilated starter trim. see Diagram 7.

6

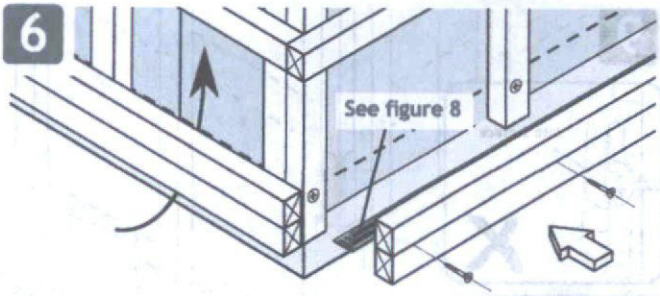

If fixing cladding vertically, fix horizontal battens over vertical counter battens.

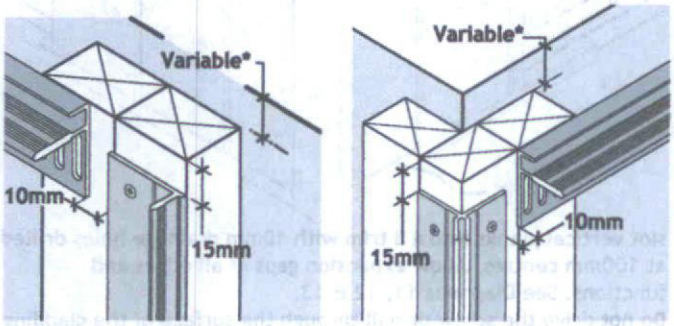

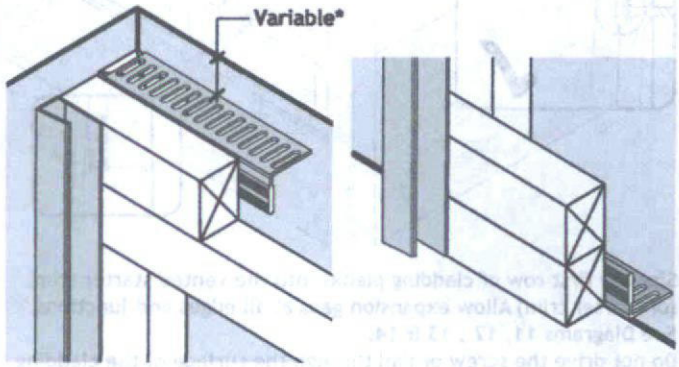

Fix 1 part trims, first part of 2 part trims & vented starter trims. Refer to Diagrams 5, 6, 7 & 8.

7 PVC Vented Starter/Closer

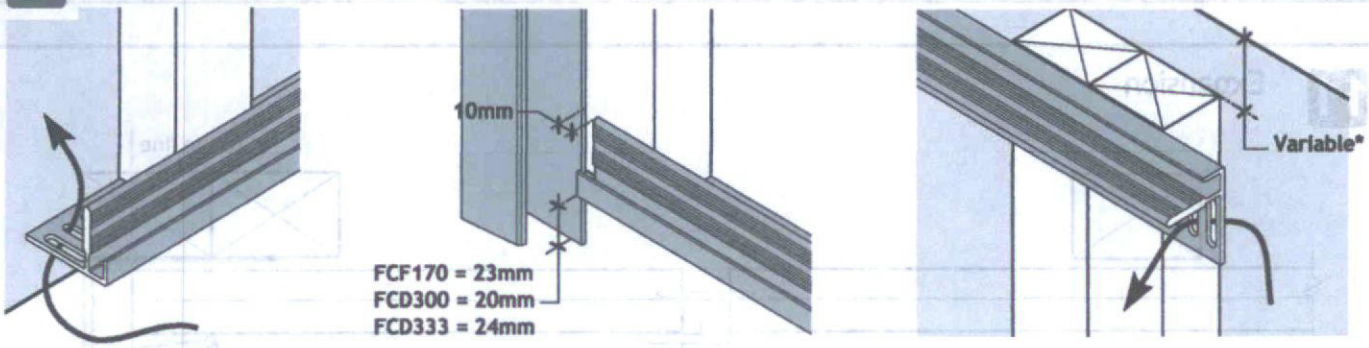

*Allow space for fixing cover trim if required. See figure 14

8 Vertical Cladding Details

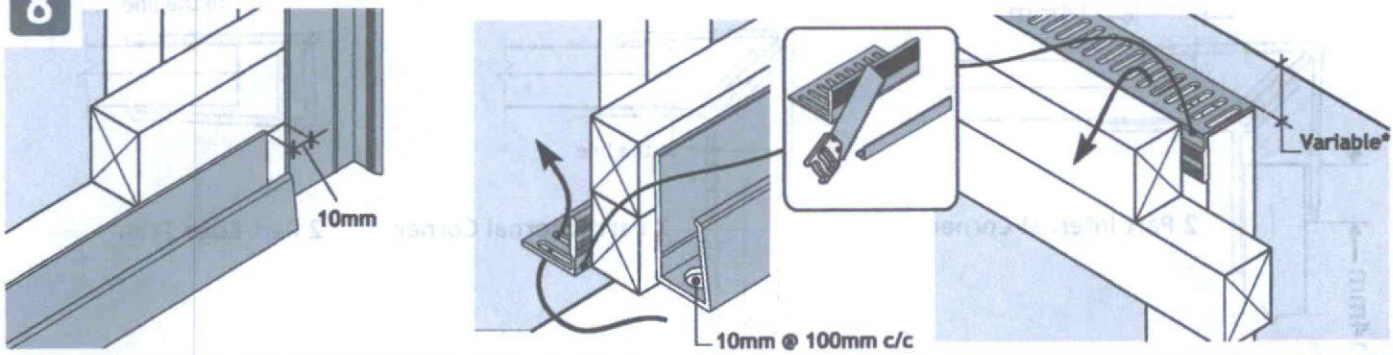

*Allow space for fixing cover trim if required. See figure 14

Both multifunction & standard trims can be used for vertical and horizontal cladding

9

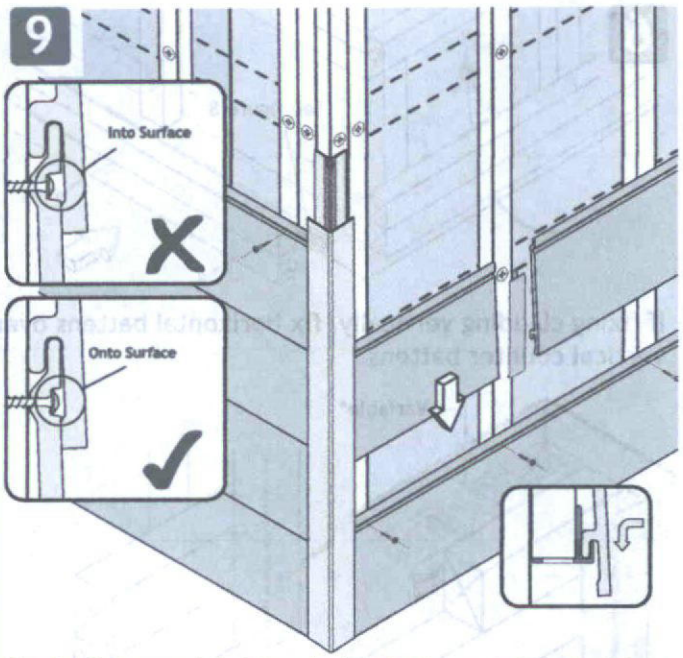

Slot the first row of cladding planks into the vented starter trim. (or starter trim) Allow expansion gaps at all edges and junctions. See Diagrams 11, 12 , 13 & 14.
Do not drive the screw or nail through the surface of the cladding as this will prevent the plank from moving if it expands.

Install the cladding planks from left to right and secure with 3.5 x 30mm corrosion resistant screws. Do not use force during the installation and screwing.

10

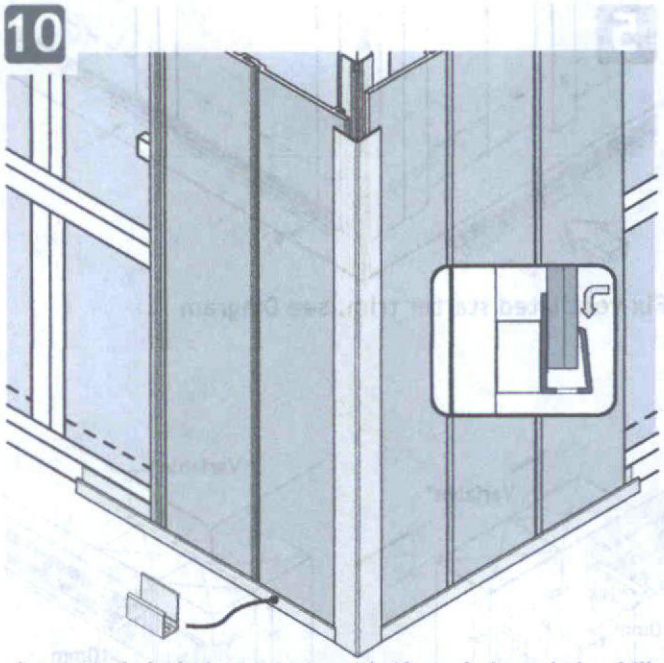

slot vertical planks into a J trim with 10mm drainage holes drilled at 100mm centres. Allow expansion gaps at all edges and junctions. See Diagrams 11, 12 & 13.
Do not drive the screw or nail through the surface of the cladding as this will prevent the plank from moving if it expands.

Install vertical cladding planks from right to left and secure with 3.5 x 30mm corrosion resistant screws. Do not use force during the installation and screwing.

When all cladding is in place. Fix second parts of finishing trims. See figures 13 & 15

11 Expansion

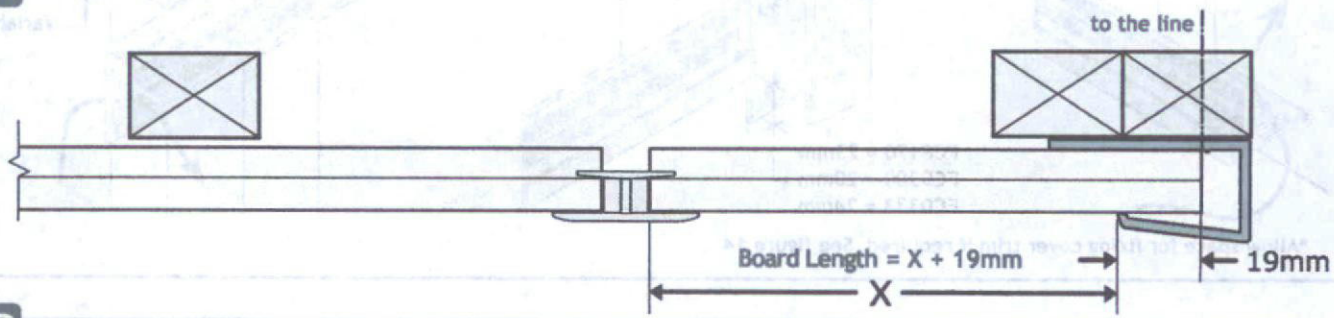

12 3 Series Trims

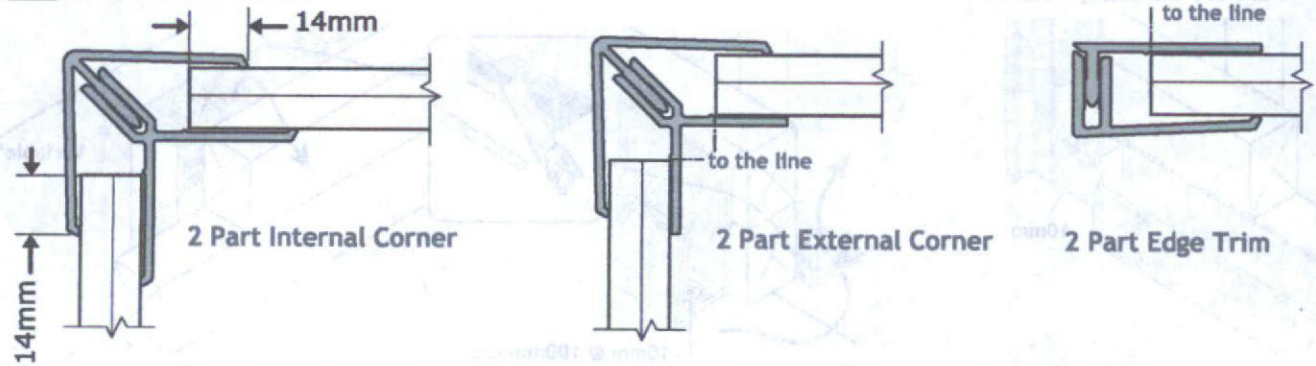

13 3 Series Trim Details

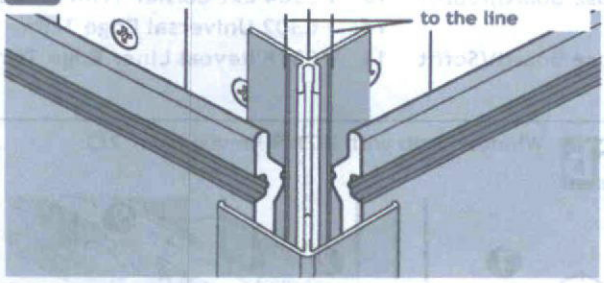

External Corner Trim

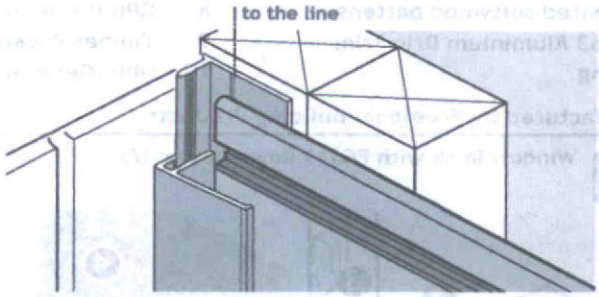

2 Part Edge Trim

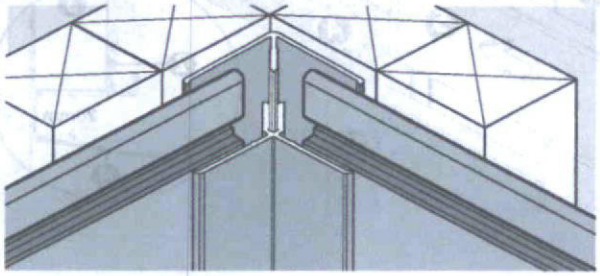

Internal Corner Trim

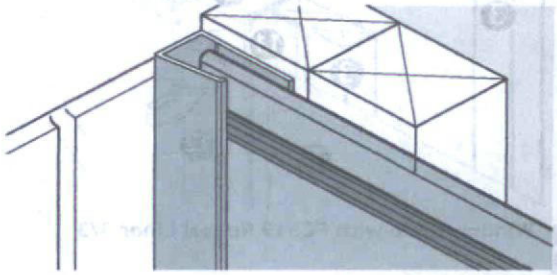

1 Part Edge Trim

14

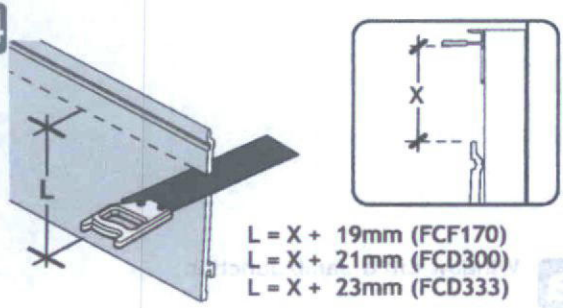

L = X + 19mm (FCF170)
L = X + 21mm (FCD300)
L = X + 23mm (FCD333)

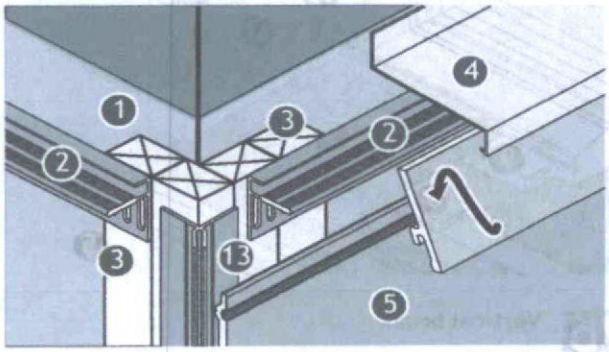

Fix vented starter/closer trim. Refer to Diagrams 7 & 8. Cut your cladding plank using the formula given.

Ventilation detail

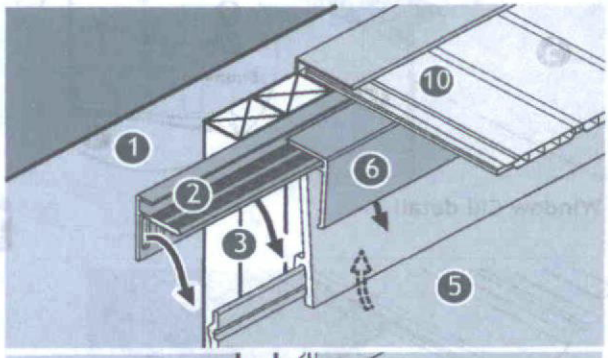

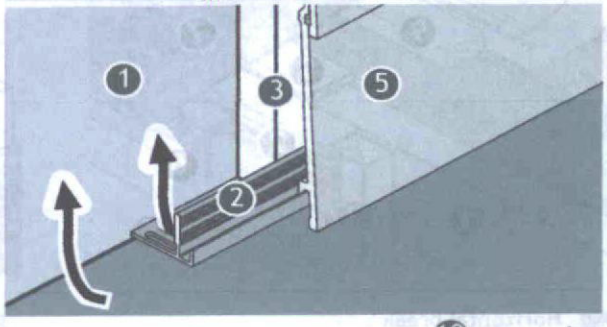

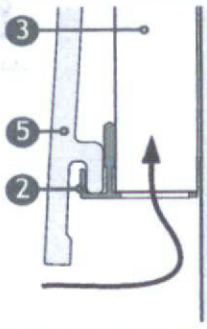

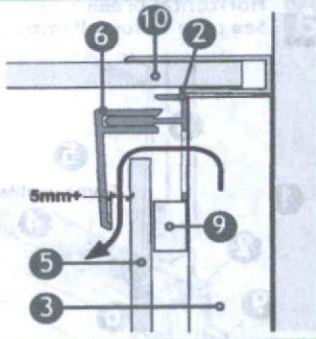

1 Breather Membrane*
2 FC3123 Ventilated Starter/Closer
3 Pre-treated softwood battens
4 FCA3063 Aluminium Drip Trim
5 Cladding
6 FC311E3 Ventilated Closer
7 Cill*
8 GPB (General Purpose Board)/Soffit
9 Timber Packing
10 GPB (General Purpose Board)/Soffit
11 FC319 Reveal Liner - Part 1
12 FC319 Reveal Liner - Part 2
13 FC304 Ext Corner Trim - Part 1
14 FC302 Universal Edge Trim
15 FC318 Reveal Liner Edge Trim

* not manufactured by Freefoam Building Products

15a Window jamb with FC319 Reveal Liner 1/3

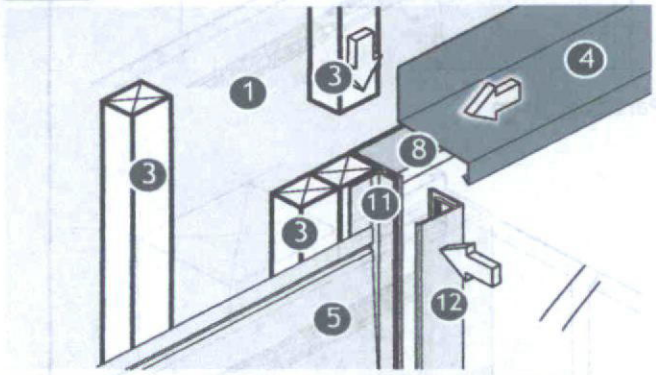

15b Window jamb with FC319 Reveal Liner 2/3

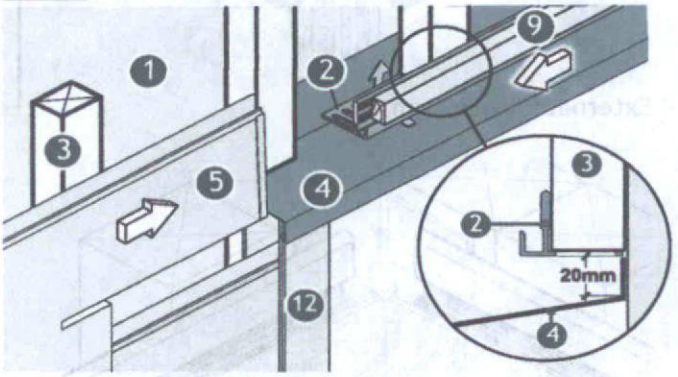

15c Window jamb with FC319 Reveal Liner 3/3

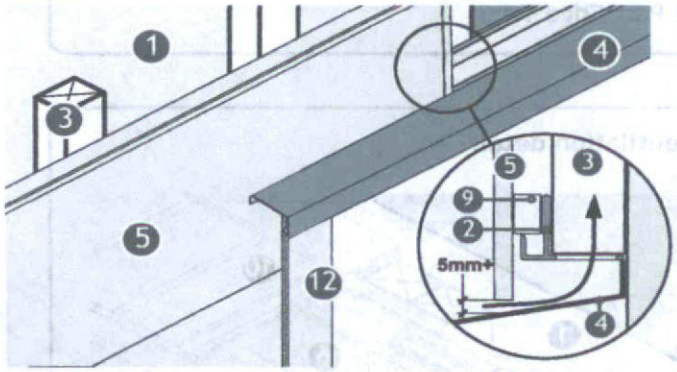

16 Window Cill detail

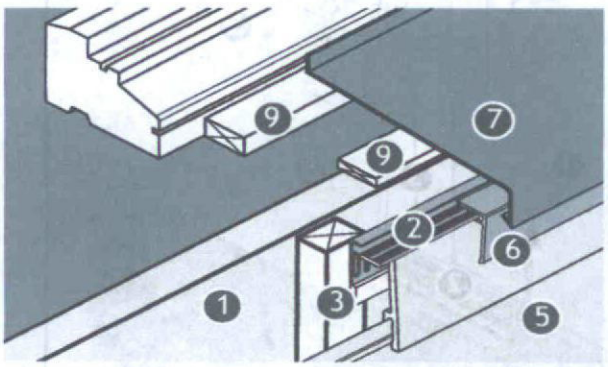

16a Window Cill & Jamb Junction

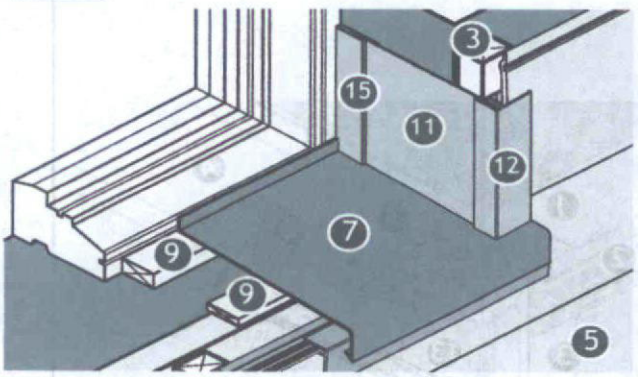

17a Horizontal break

See page 17 for full instructions.

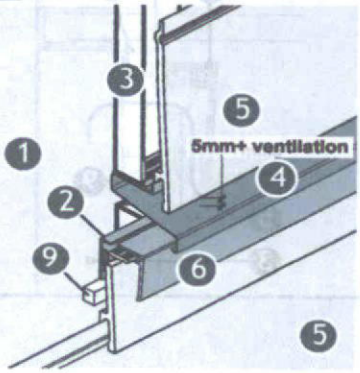

17b Vertical break

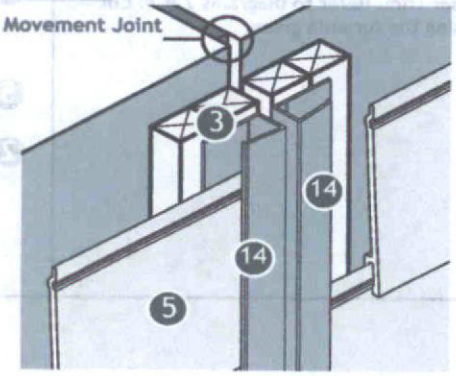

VERTICAL CLADDING

All Freefoam cladding profiles can be fitted vertically. See **freefoam.com/downloads** for instructions.

DORMER WINDOWS

Cladding is ideal for a dormer elevation. For full fitting instructions See **freefoam.com/downloads**

GABLE END

Install ventilated trim and cover trim to gable angle.

Use Ventilated Trim (FC311E3) for edge of gable.

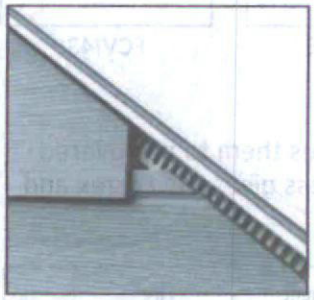



OPEN CONSTRUCTION

When fixing to open batten construction such as sheds or timber frame structures a rigid sheet material such as OSB is required to separate the ventilation space between the cladding battens from the airspace inside the structure.

INSTALLATION NOTES

Fixing

Only use corrosion resistant screws for fixing cladding planks and accessories. Cladding should only be installed at temperatures within the range of 5° - 25°C.

Expansion

The recommended minimum expansion gaps at the ends and between cladding planks (See Diagram 11,12,13 & 14) should be strictly adhered to. A minimum of 27mm

Breaks

Where a cladding panel exceeds 6m in height, a horizontal break should be provided by use of a drip trim to facilitate ventilation openings. See figure 17a. For installations greater than 10m long a vertical break will be required. Vertical breaks mitigate any cumulative expansion. Horizontal breaks aid cooling of cavity and in some cases are required as cavity breaks for preventing spread of flame between storeys, such as in cases where there are different occupancies.

Finishing

Where required fit a cover strip or drip trim to prevent rain from entering the cavity at the top of the installation.

The guidance for provision of expansion and ventilation provided in this document applies in all cases including windows, doors, gables ends, dormers etc.

Ensure that all installations comply with local Building Regulations and general good building practice. Consult you local Planning Department for guidance.

MAINTENANCE

Regular Inspection

Under normal conditions Freefoam cladding requires minimal maintenance. Environmental impacts may effect the visual appearance of the façade. An annual inspection of the ventialtion gaps, joints and fixings is recommended. Detection and repair of possible damage ensures longer life for our cladding.

Cleaning

Clean Freefoam cladding with cold or lukewarm water. If necessary add mild household cleaning detergent that does not contain solvents. You can also use High Pressure washer (on half power) to clean cladding. Do not use solvents or aggressive cleaning products. Start at the top. At least once a year is recommended.

Impact from Nature

Coastal locations are subject to more extreme conditions due to salt laden moist air and wind-blown sand. We recommend more regular inspections in such locations. Pay particular attention to corners of cladding, around windows and doors particularly those facing the prevailing wind.

STORAGE

- Prior to installation cladding should be stored out of direct sunlight.
- Check the cladding surface for damage prior to installation.
- Complaints of surface defects will not be accepted after installation is complete.

CLADDING CALCULATOR

Use the handy online tool to help you estimate the number of boards and pack quantities for a project. Eliminate wastage to save money.

Go to **www.freefoam.com**

EASY TO ORDER

Freefoam Cladding is available nationwide.

To find your local supplier go to **www.freefoam.com**

Dimensions (mm)

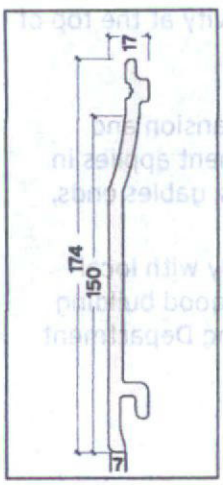

FC151

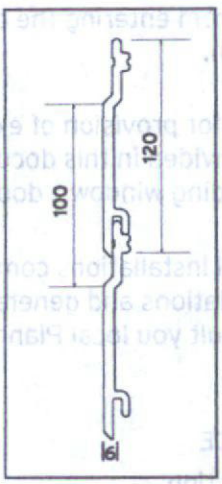

FV100

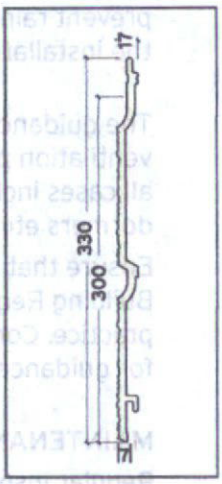

FCD300E

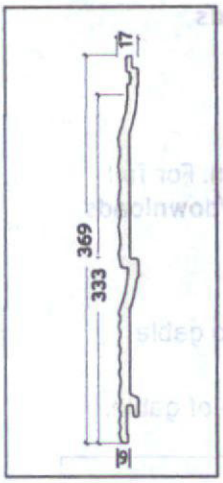

FCD333E

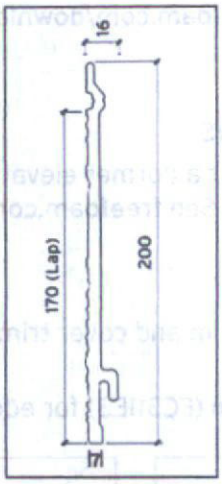

FCF170E

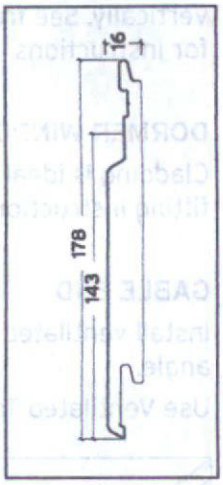

FCV143

Technical Data

Freefoam cladding products are produced from cellular PVC. A co-extrusion process enables them to be covered with a layer of PVC resistant to UV rays and discolouration. An additional embossing process gives the Fortex and X-Wood products their textured effect.

	Length	Pack Quantity	Material	Coverage Per Board Length	Density	Expansion Coefficient	Weight per board	Fire Rating
Shiplap FC151	5m	5	Cellular PVC & UV Resistant co-extruded skin	0.75m²	510kg/m³	5 x 10 / °C	2.75kg	D-s3,d2/AVM
Shiplap FC151 + Woodgrain Foil	5m	5	Cellular PVC & UV Resistant High Performance Film	0.75m²	510kg/m³	5 x 10 / °C	2.75kg	E
Open V FV100	5m	5	Cellular PVC & UV Resistant co-extruded skin	0.5m²	510kg/m³	5 x 10 / °C	1.95kg	D-s3,d2/AVM
Open V FV100 + Woodgrain Foil	5m	5	Cellular PVC & UV Resistant High Performance Film	0.5m²	510kg/m³	5 x 10 / °C	1.95kg	E
Double Shiplap 300mm FCD300E	5m	2	Cellular PVC & UV Resistant co-extruded skin	1.5m²	510kg/m³	5 x 10 / °C	6kg	D-s3,d2/AVM
Double Shiplap 333mm FCD333E	5m	2	Cellular PVC & UV Resistant co-extruded skin	1.65m²	510kg/m³	5 x 10 / °C	7.85kg	D-s3,d2/AVM
Weatherboard FCF170E	5m	6	Cellular PVC & UV Resistant co-extruded skin	0.85m²	510kg/m³	5 x 10 / °C	3.15kg	D-s3,d2/AVM
X-Wood FCV143 + Woodgrain Foil	5m	5	Cellular PVC & UV Resistant High Performance Film	0.71m²	500kg/m³	40 x 10-6/°C (DIN53377)	6.25kg	D-s3,d2

Accreditation

Freefoam Fortex Cladding is accredited by the CSTB.

CSTB
le futur en construction

77-83 St James Mill Road
Northampton
NN5 5JP, UK
T: 01604 591110
E: orders@freefoam.com
www.freefoam.com

Central Commercial Park
Centre Park Road
Cork T12 KC96
IRELAND
T: 021 496 6311

PEFC
Paper from PEFC-certified forest

freefoam
Building Products