DETAIL SHEETS

Section Through Standard Configuration.

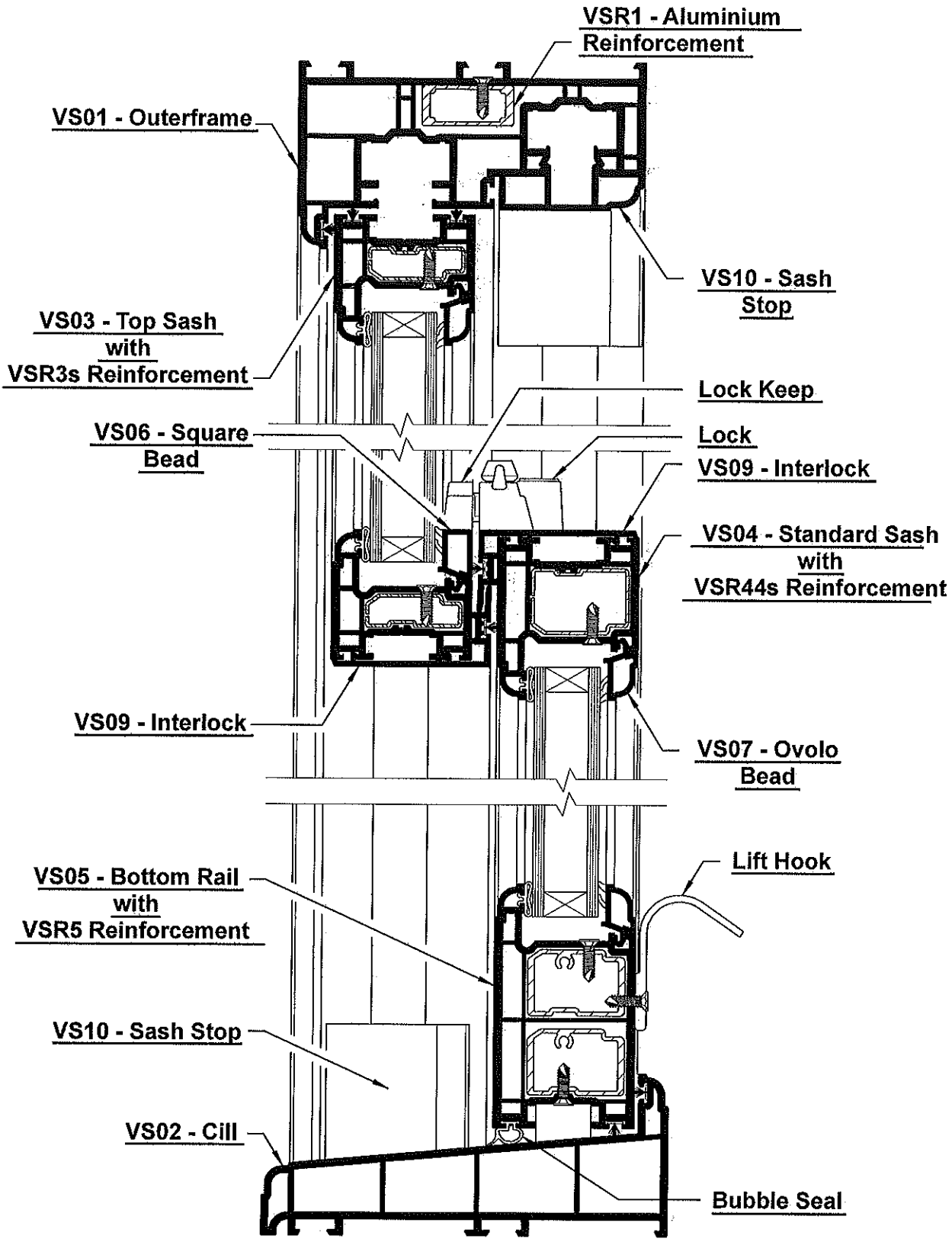

DETAIL SHEETS

Section Through Heavy Duty Configuration.

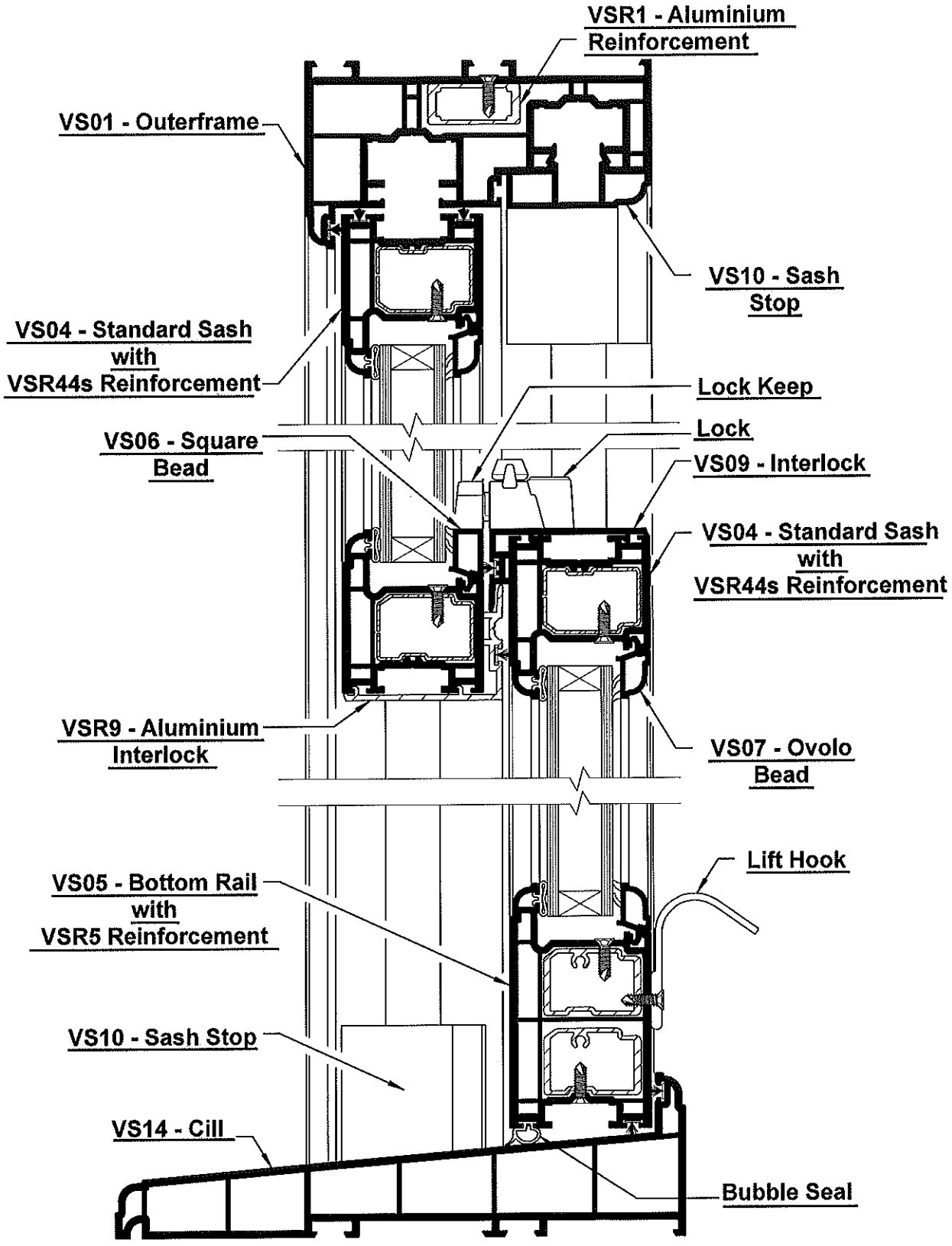

DETAIL SHEETS

Vertical Section - V1.

(Standard Configuration)

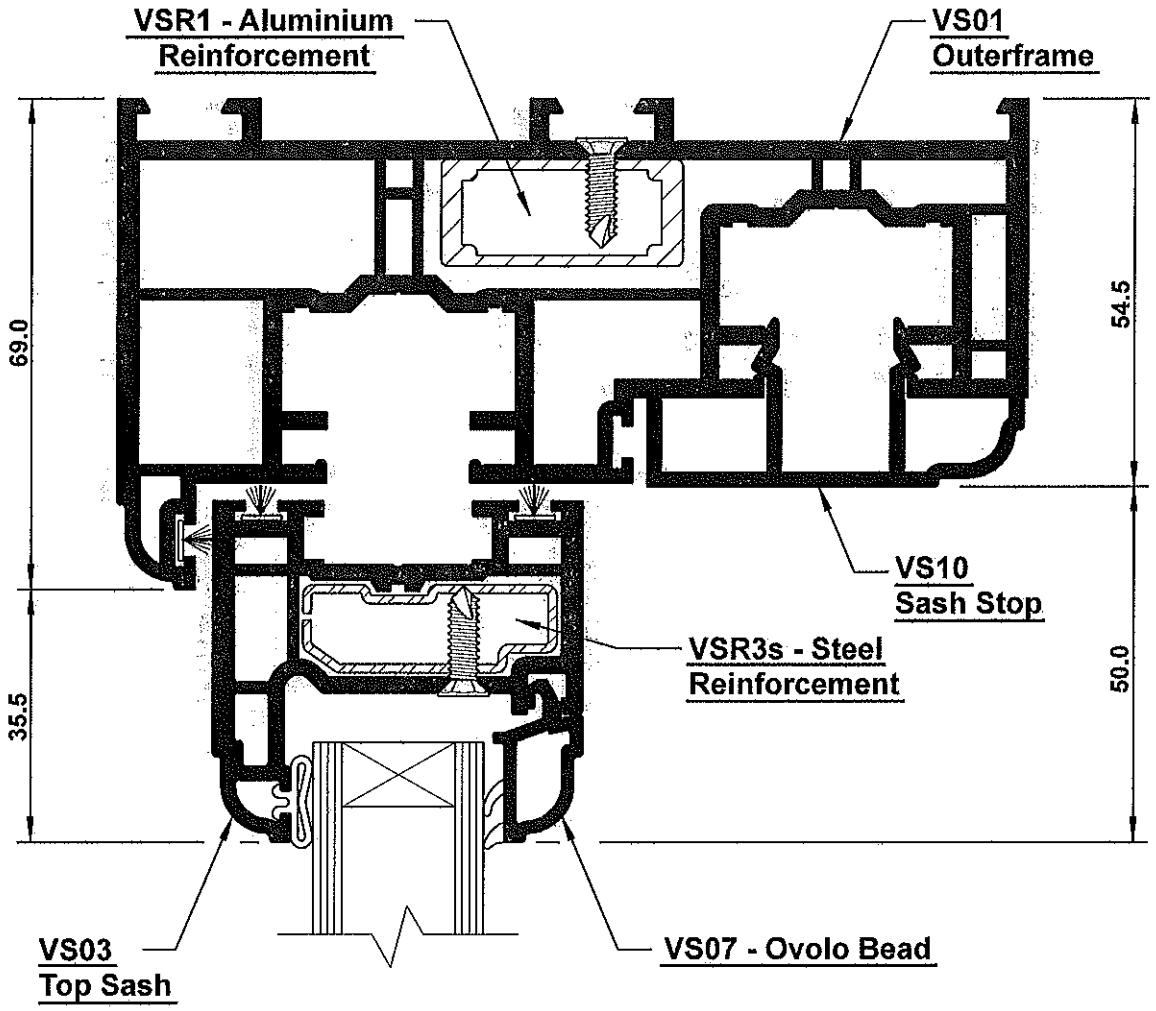

(window viewed from outside).

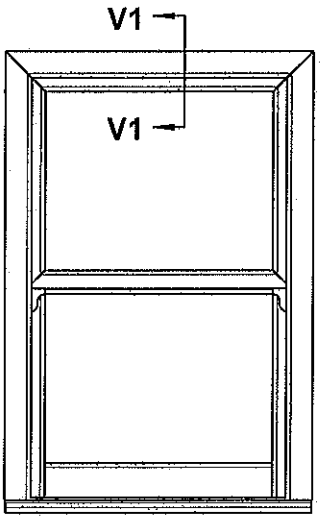

DETAIL SHEETS

Vertical Section - V1.

(Heavy Duty Configuration)

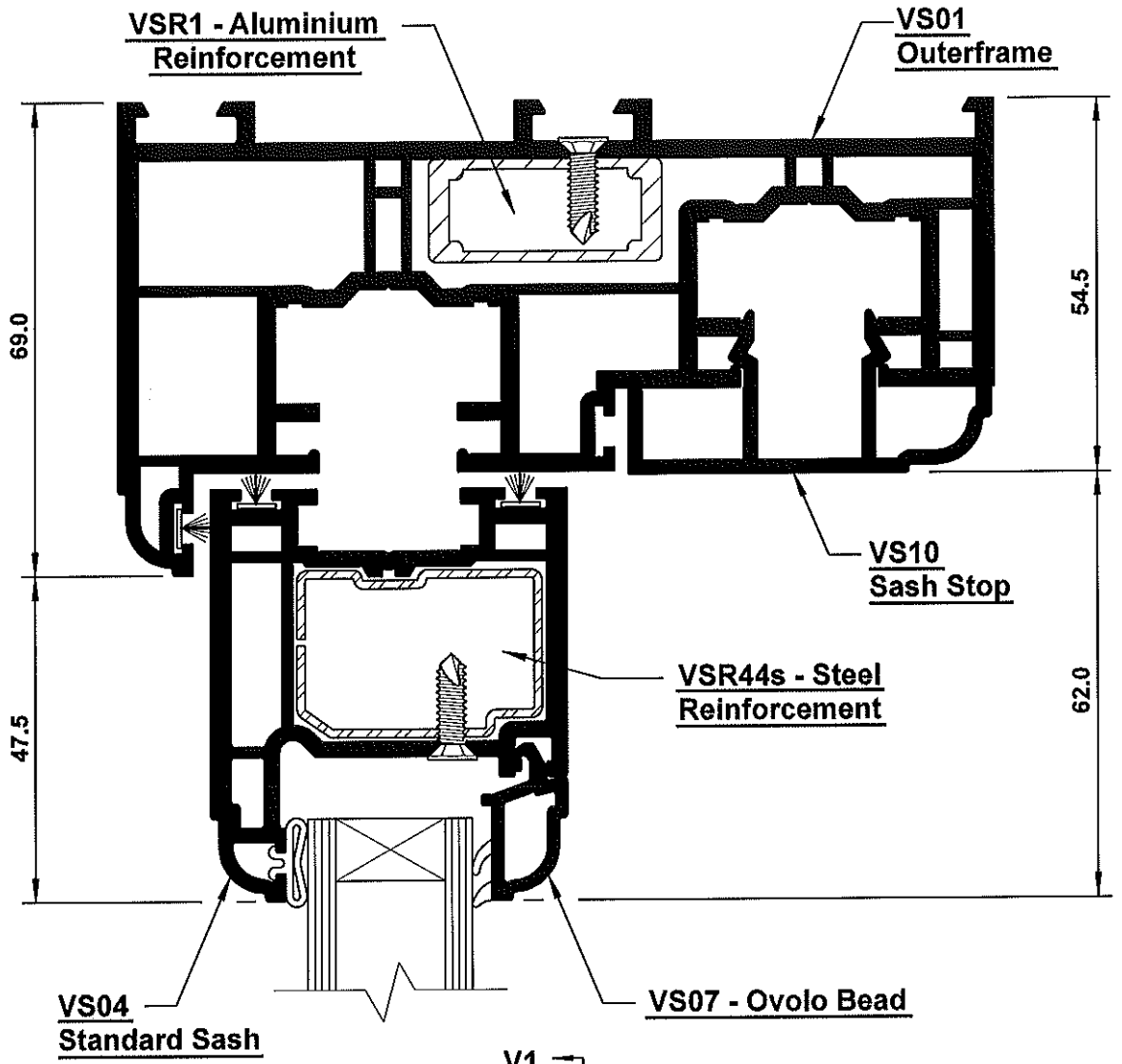

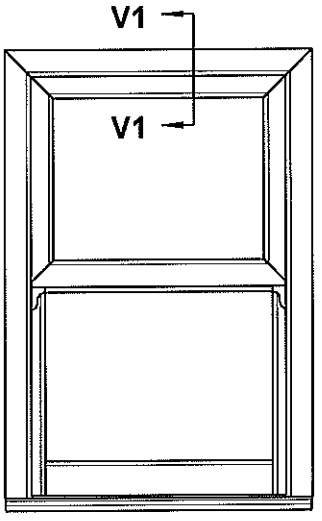

(window viewed from outside).

DETAIL SHEETS

Vertical Section - V2.

(Standard Configuration)

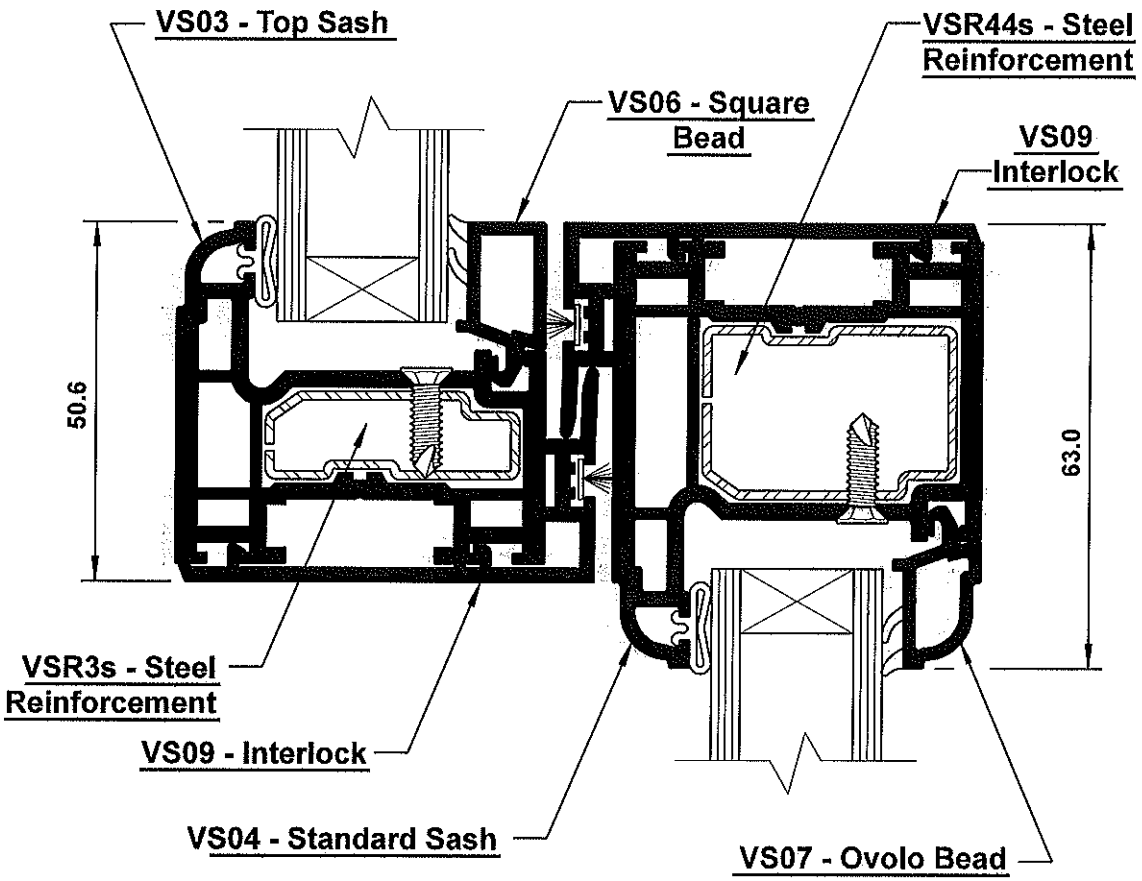

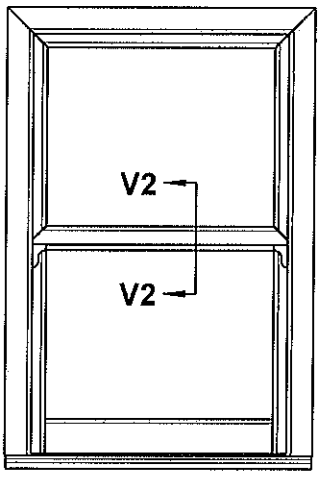

(window viewed from outside).

DETAIL SHEETS

Vertical Section - V2.

(Heavy Duty Configuration)

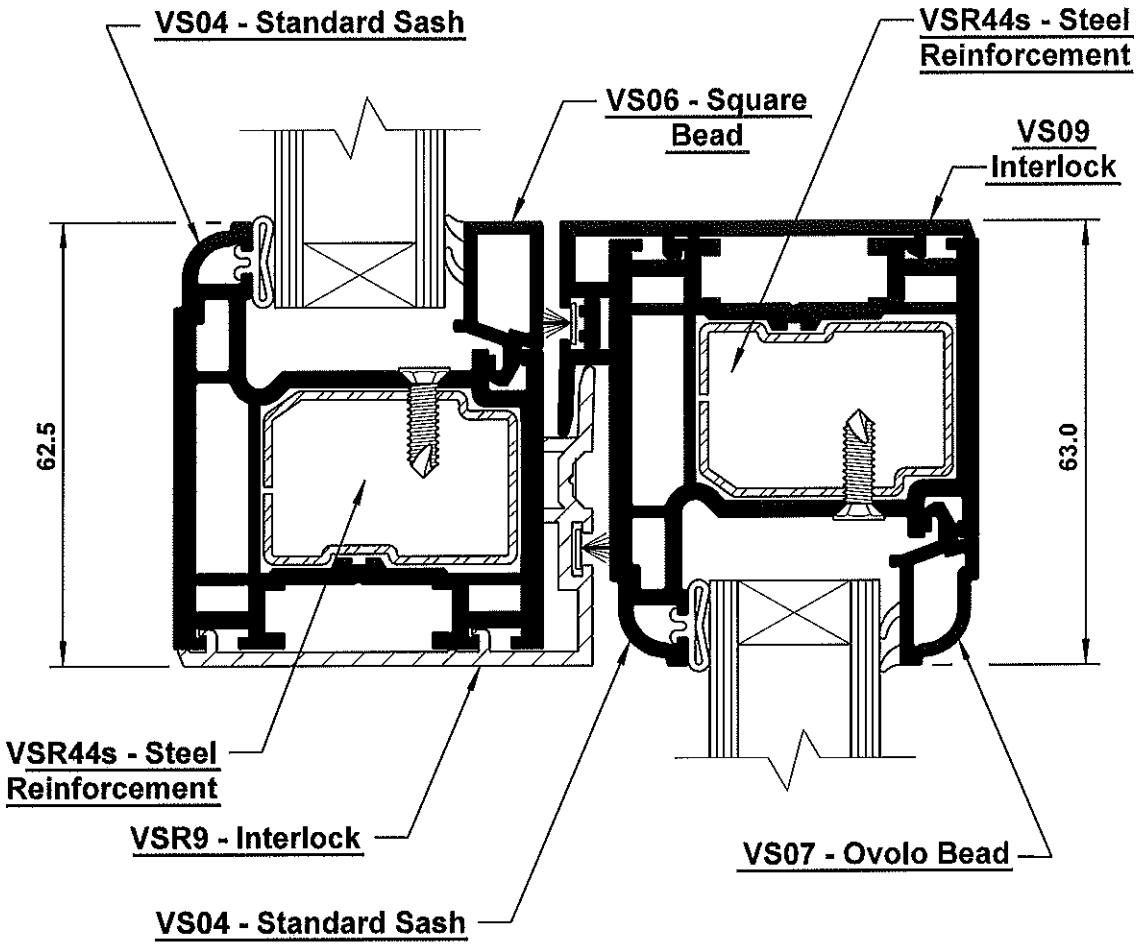

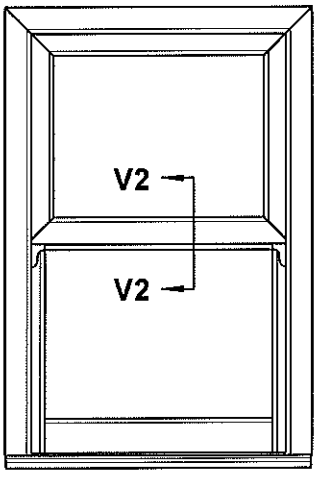

(window viewed from outside).

DETAIL SHEETS

Vertical Section - V3.

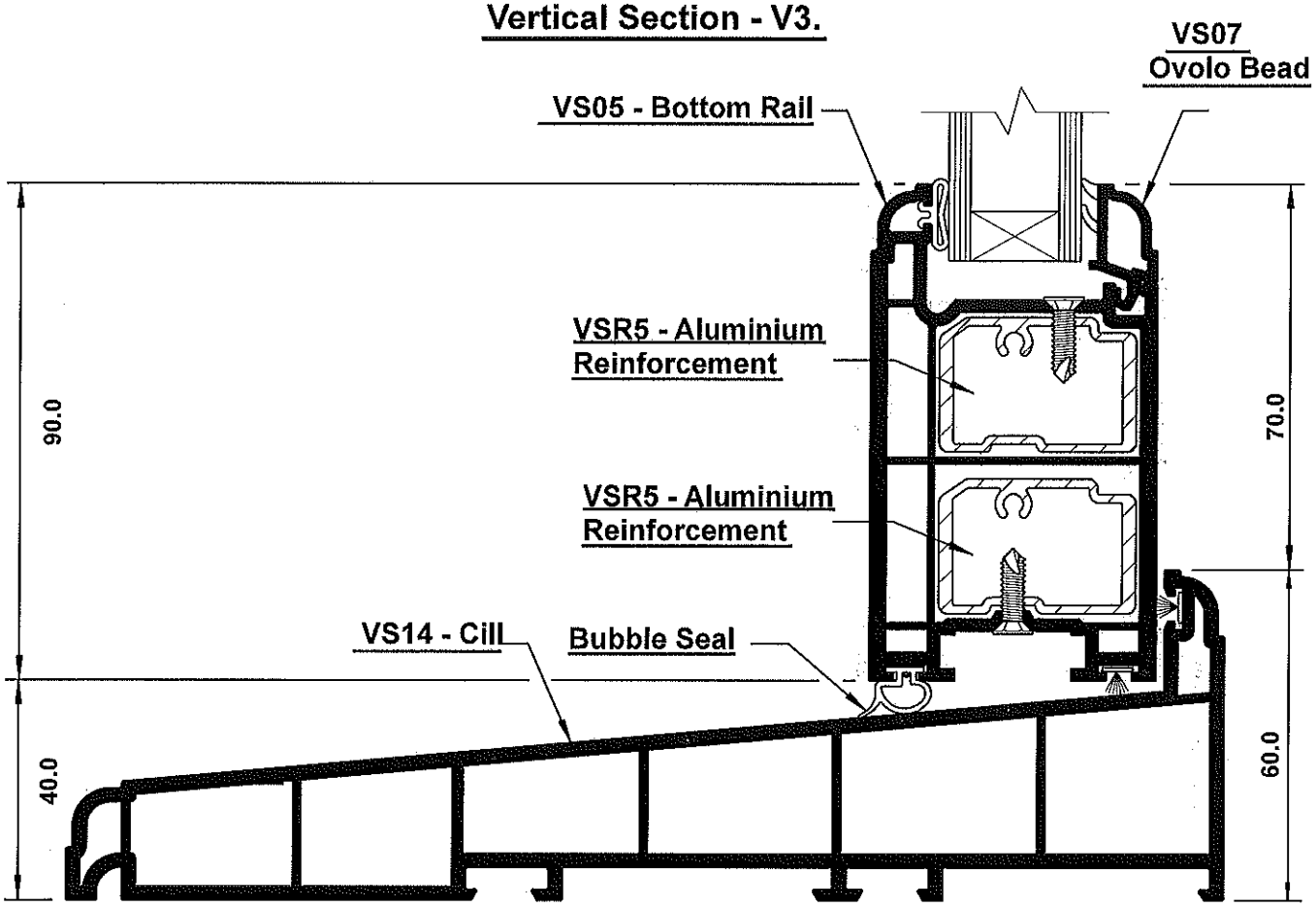

(window viewed from outside).

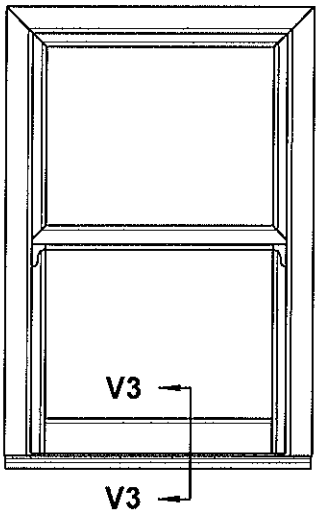

DETAIL SHEETS

Vertical Section - V3.

(Without Bottom Rail)

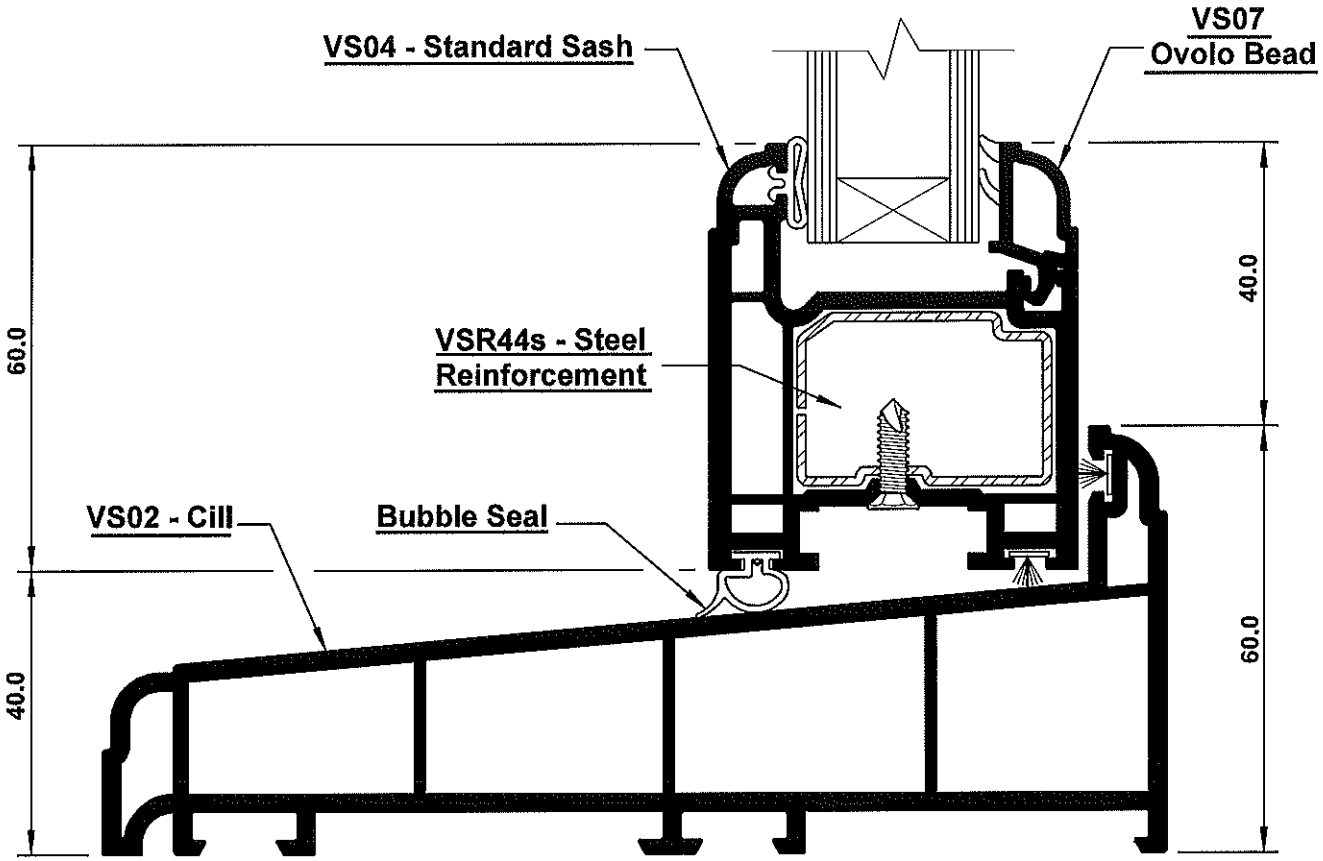

(window viewed from outside).

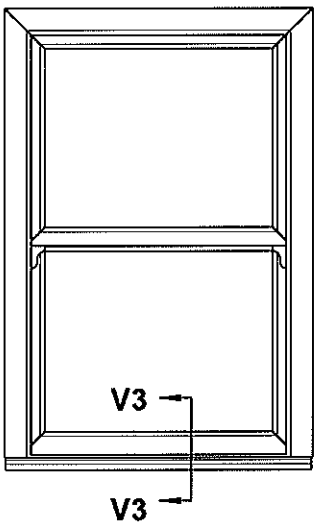

DETAIL SHEETS

Horizontal Section - H1.

(Standard Configuration)

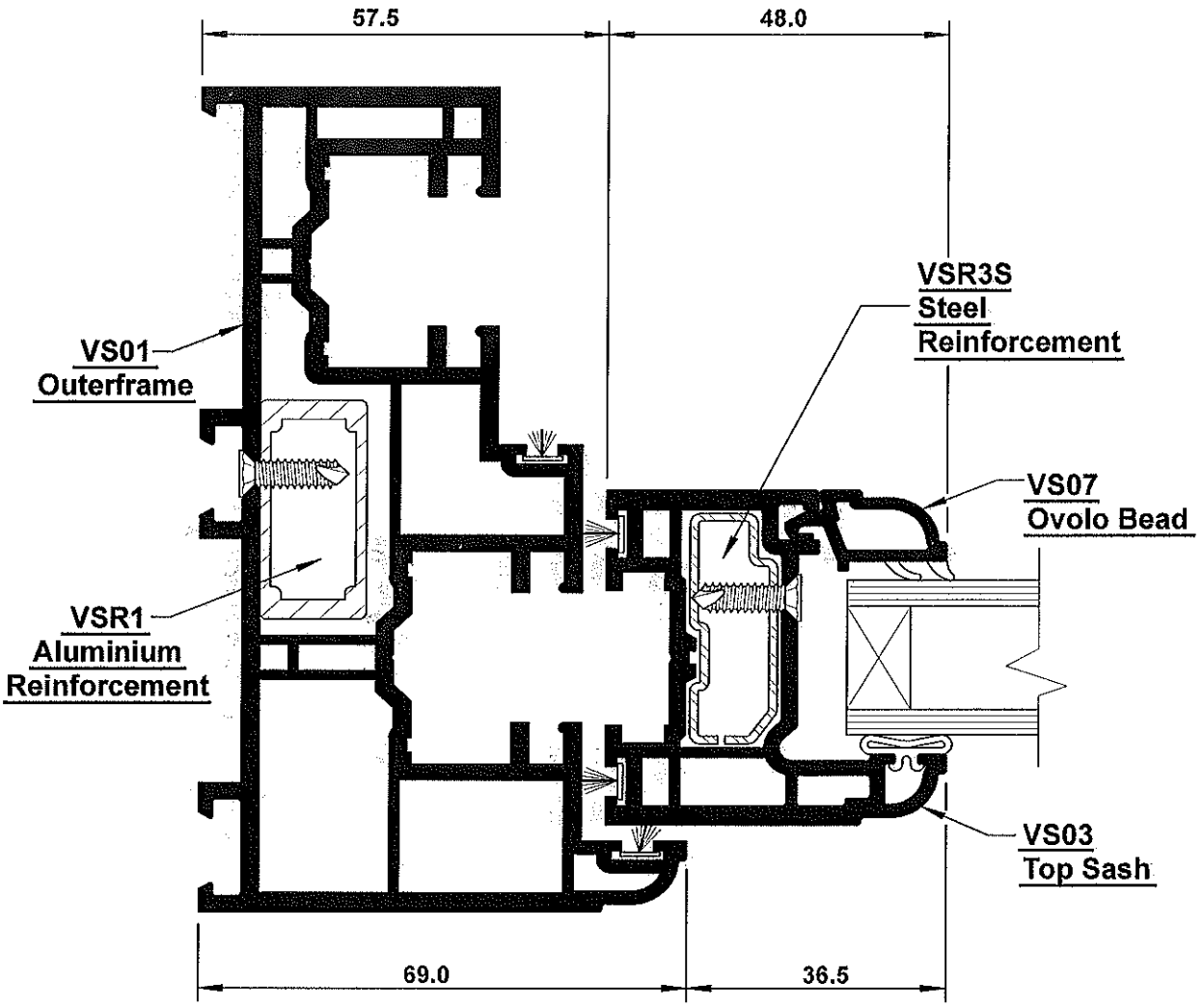

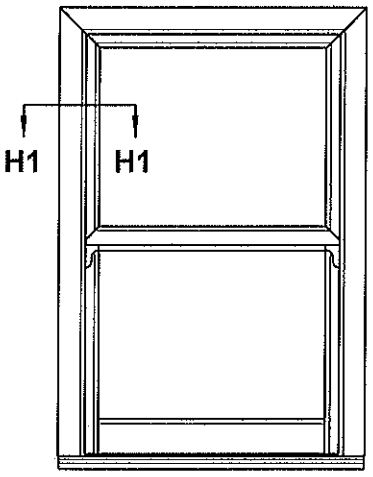

(window viewed from outside).

DETAIL SHEETS

Horizontal Section - H1.

(Heavy Duty Configuration)

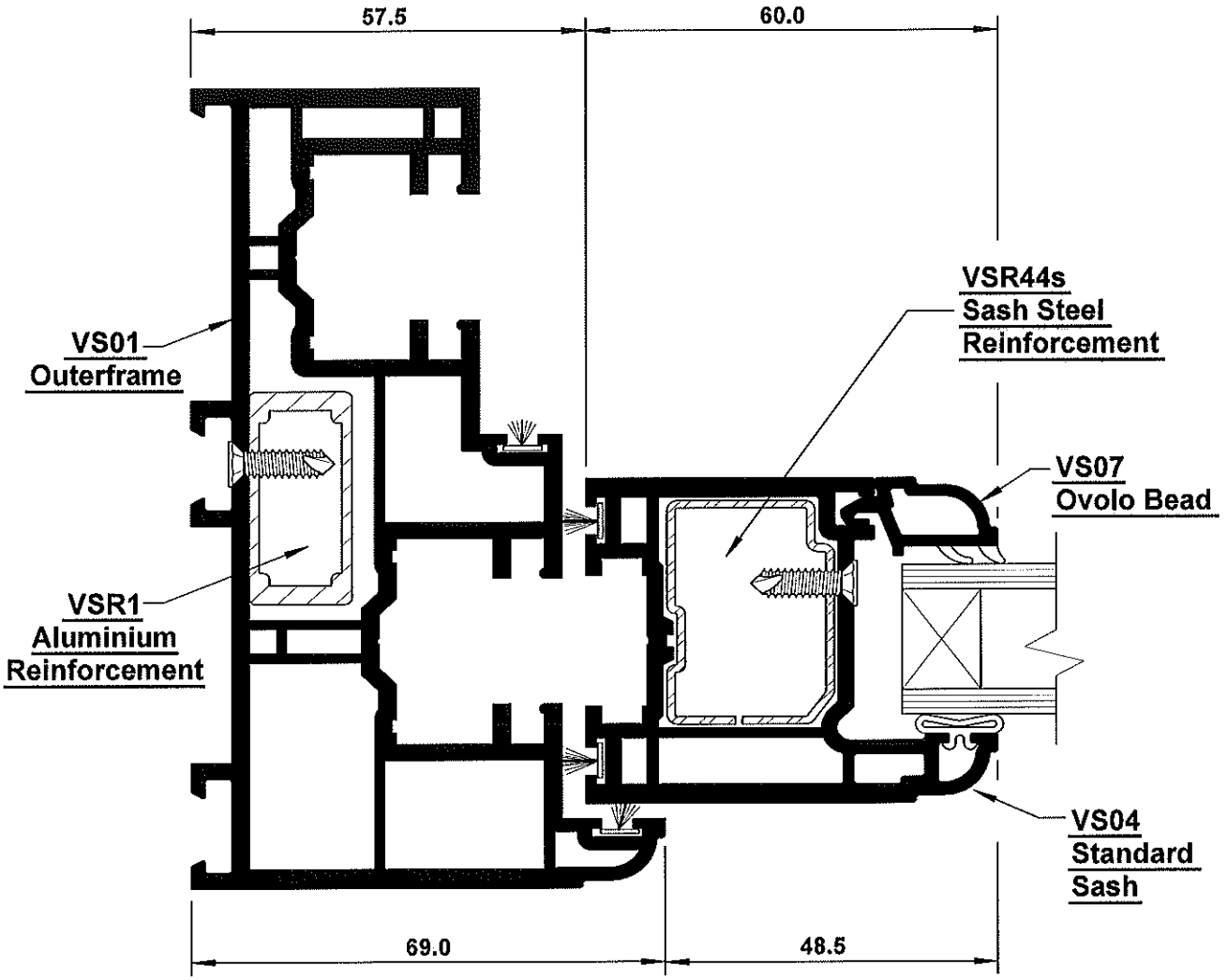

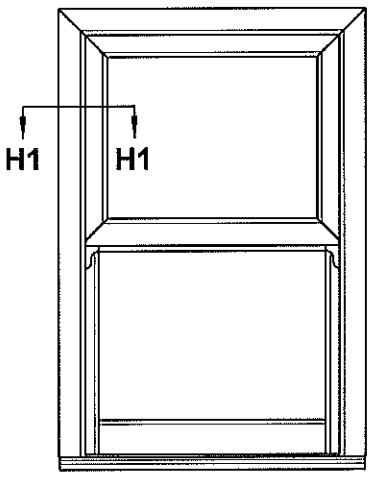

(window viewed from outside).

DETAIL SHEETS

Horizontal Section - H2.

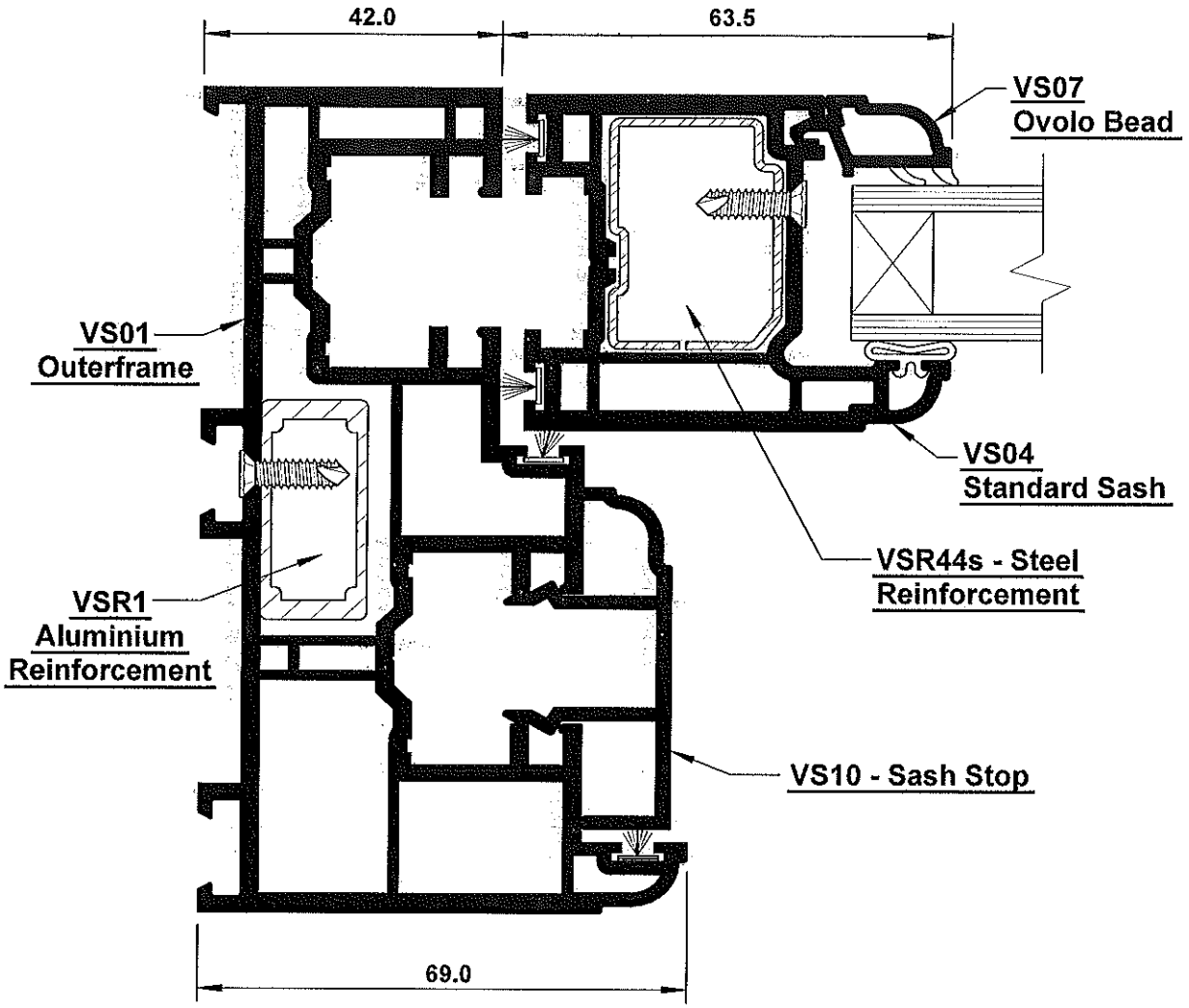

(window viewed from outside).

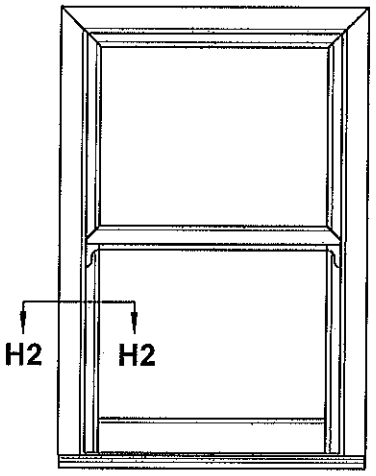

DETAIL SHEETS

Horizontal Section - H3.

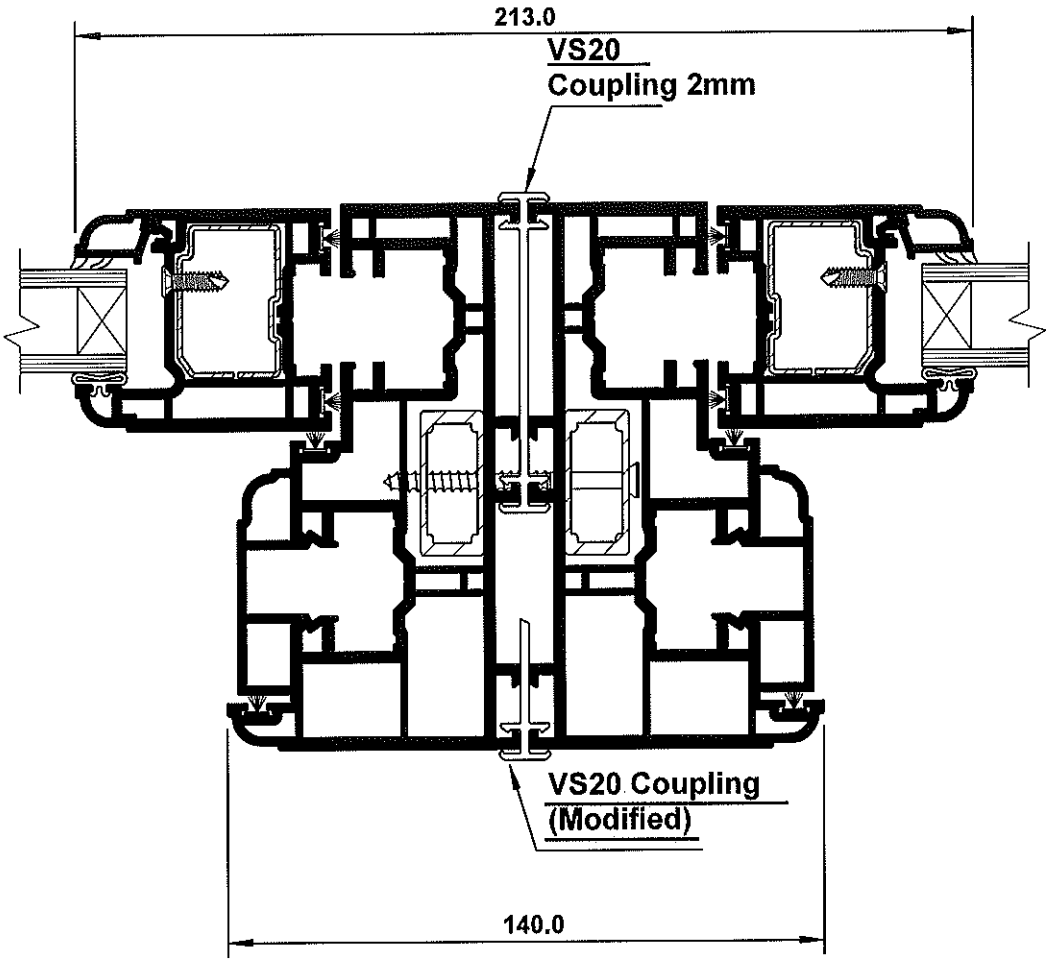

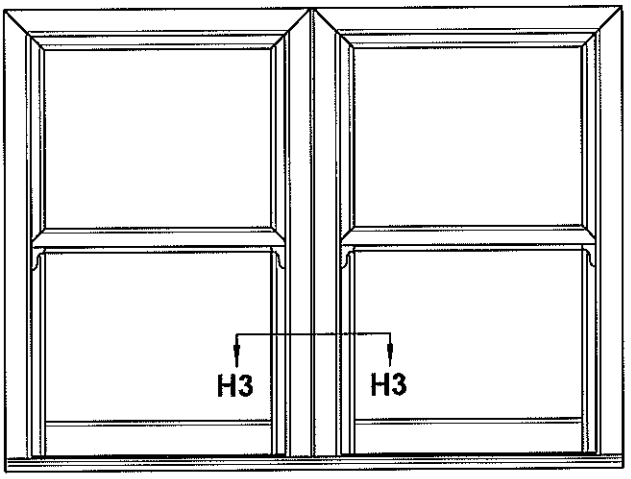

(window viewed from outside).