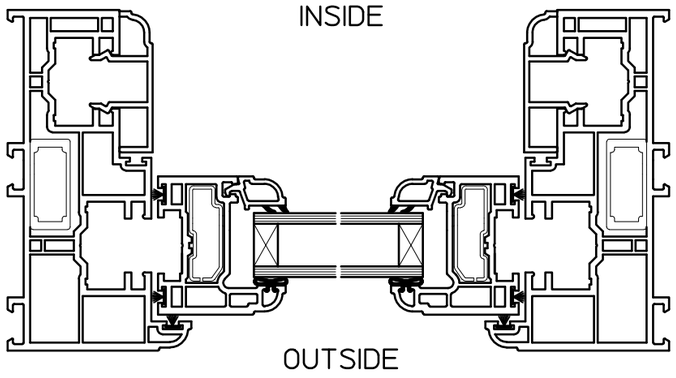

HORIZONTAL SECTION THROUGH TOP SASH

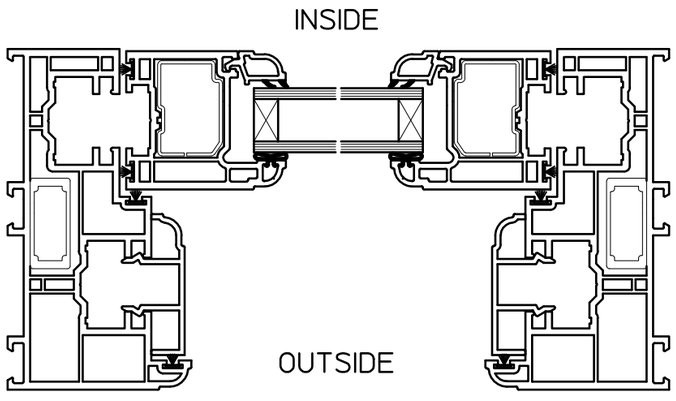

HORIZONTAL SECTION THROUGH BOTTOM SASH

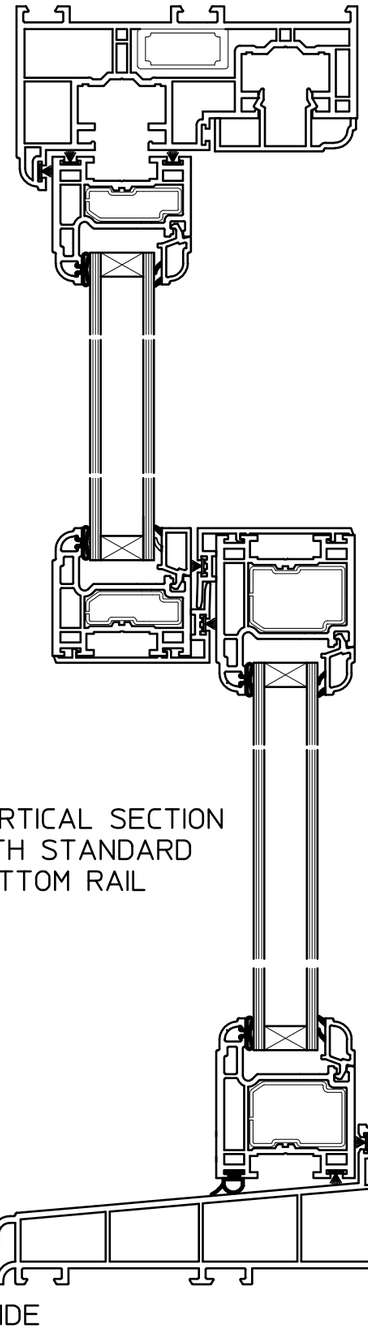

VERTICAL SECTION
WITH STANDARD
BOTTOM RAIL

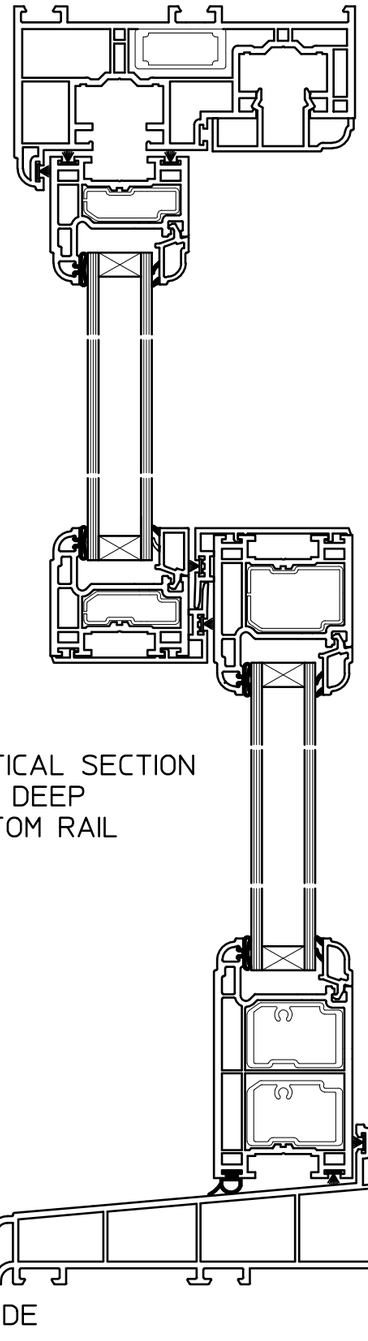

VERTICAL SECTION
WITH DEEP
BOTTOM RAIL

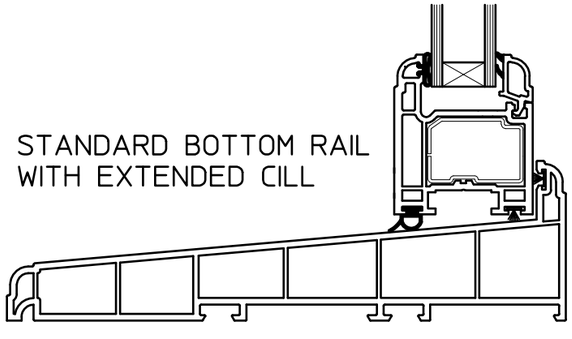

STANDARD BOTTOM RAIL
WITH EXTENDED CILL

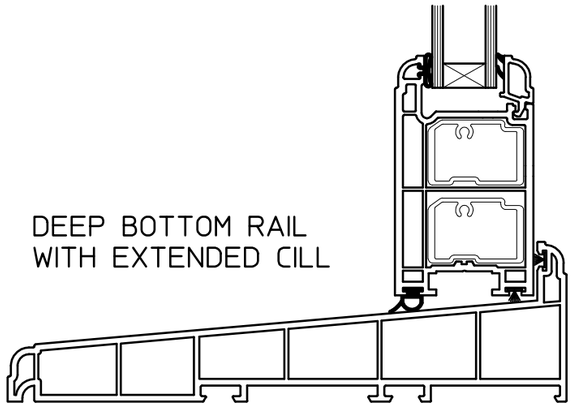

DEEP BOTTOM RAIL
WITH EXTENDED CILL

OUTSIDE INSIDE

OUTSIDE INSIDE