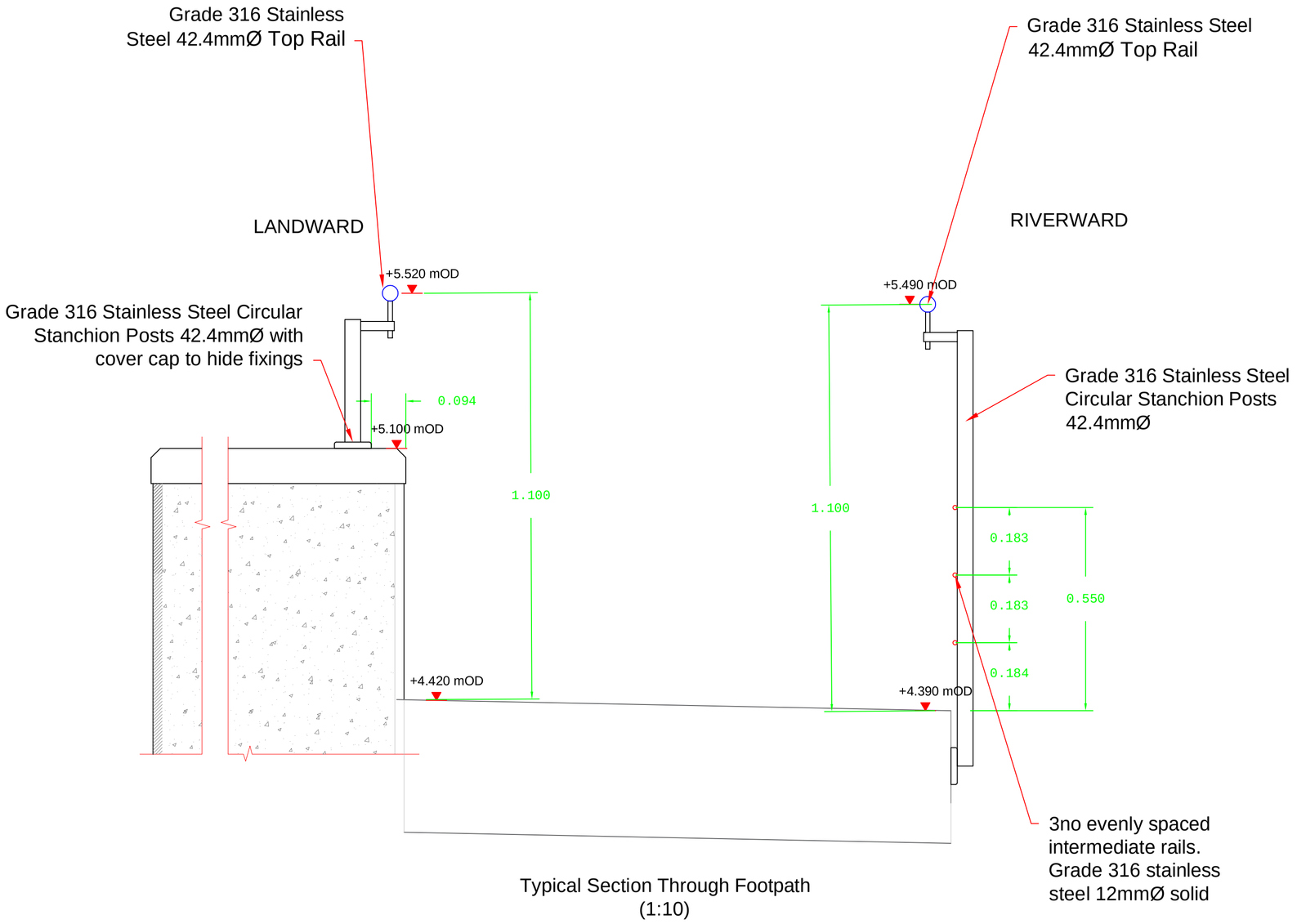

Typical Section Through Footpath
(1:10)





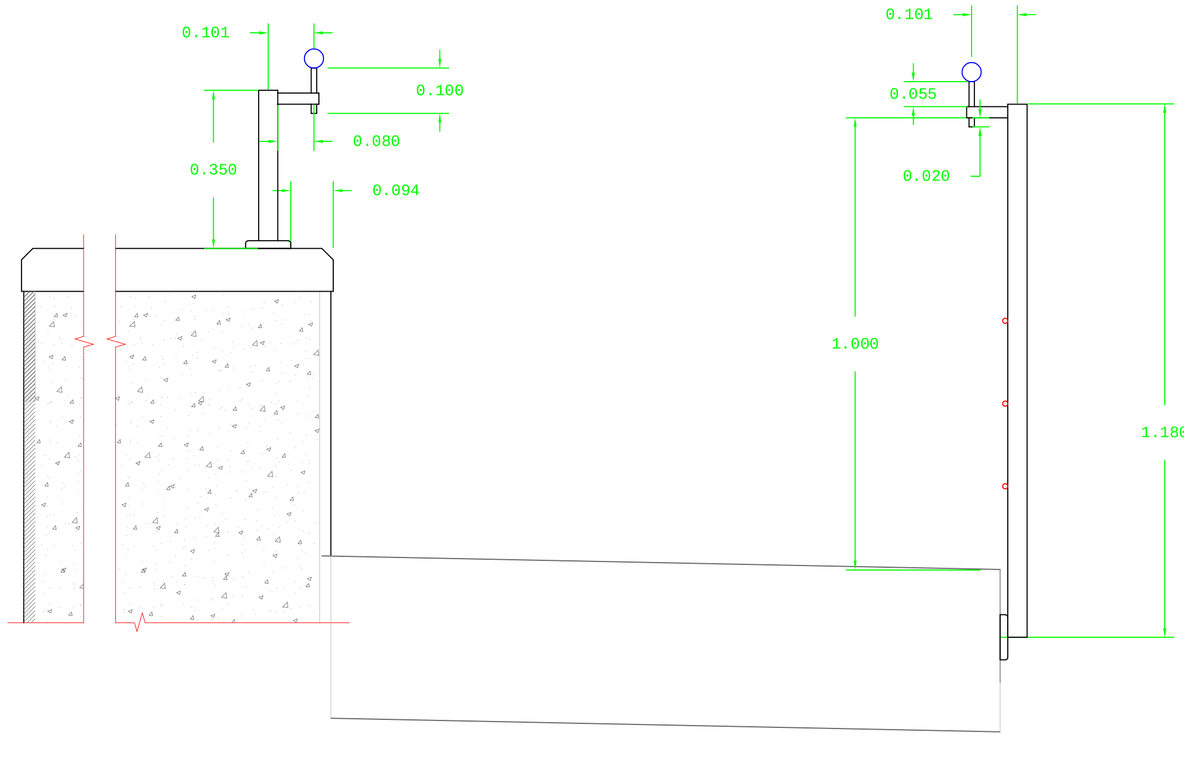

Post Dimensions
(1:10)

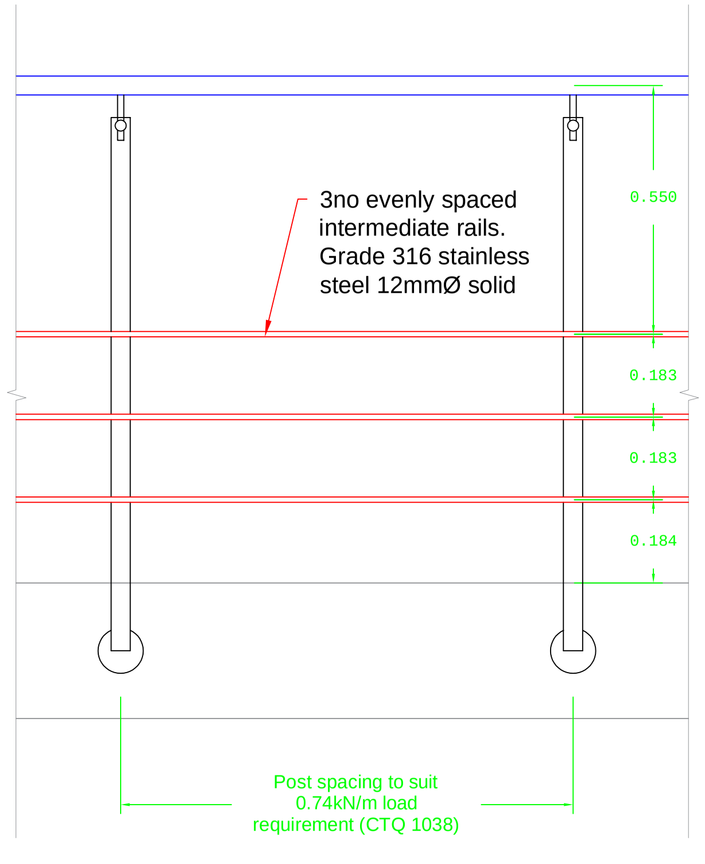

Typical Elevation Of
Riverward Guardrail
(1:10)

ALL MATERIALS TO BE BRUSHED
FINISHED GRADE 316 STAINLESS STEEL

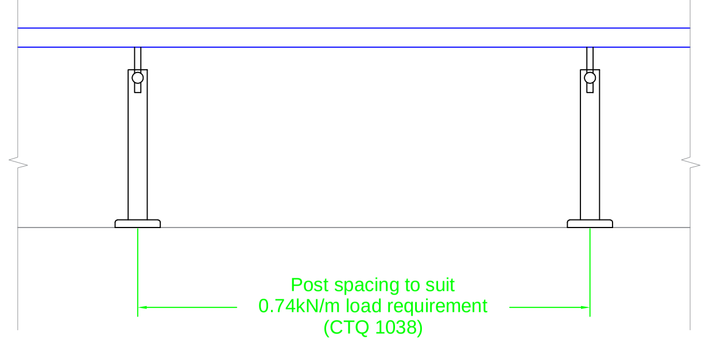

Typical Elevation Of Landward
Capping Beam Guardrail
(1:10)

NOTES

1. Post spacing to be checked and amended to suit guardrail type E load requirement, 0.74kN/m
2. This drawing should be read in conjunction with Mott McDonald construction issue drawings 2900-2964.
3. All handrail materials to be brushed finished grade 316 Stainless Steel.

SYMBOLS KEY

REFERENCE DRAWINGS

DO NOT SCALE USE FIGURED DIMENSIONS ONLY

REV	DATE	DESCRIPTION
C	06/09/18	Handrail material amendments
B	26/07/18	Box-out closure bar added
A	24/05/18	Efficiency Design Change

TEAM Van Oord
MACKLEY
Bankside House
Henfield Road
Small Dole, Henfield
West Sussex. BN59XQ
T - 01273 492212
F - 01273 494328
www.mackley.co.uk

CLIENT
Environment Agency

PROJECT TITLE
Shoreham Adur Tidal Walls Scheme
(IMSO000648)

DRAWING TITLE
Reach W5
Type E Guardrail
Proposed Design Change
Details

DRAWN BY	DATE DRAWN	SHEET SIZE
SP	06/09/18	A1
CHECKED BY	DATE CHECKED	
STATUS: Information	SCALES: 1:10	
DRAWING NO.: 5000_SP_225		REVISION: C