FUJITSU

AIR CONDITIONING

Split Air Conditioner

Model : AUYG12LVLB / AUYG14LVLB / AUYG18LVLB / AUYG24LVLA

ALL DC V V-PAM

A++

12/14/18 Models





Wireless R.C.



For AUYG12/14/18LVLB



For AUYG24LVLA



Compact Cassette Range

Feature 2-stage turbo fan

High efficiency design by 2 stage structure

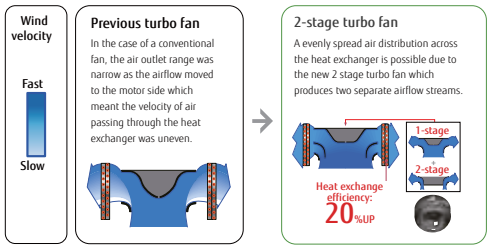

Feature Quiet quality

Optimization of wing form (laminar wing type) and wing number (7 blades each)

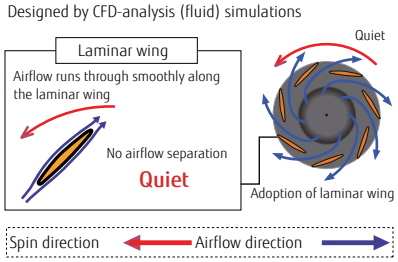

Feature Inprovement of the airflow distribution

New louvre: The louvre design distributes air leaving a space between the chassis and the ceiling allowing far and wide airflow distribution.

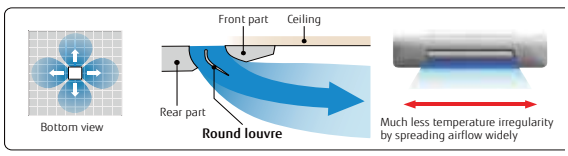

Feature Low ambient operation

-15°C

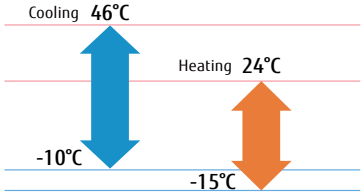

Optional parts

Wired Remote Controller:	UTYRVNYM
Simple Remote Controller:	UTYRSNYM
Fresh Air Intake Kit	UTZVXAA
External Connect Kit	UTYXWZX
Modbus Interface	FJRCMBS1
KNX Interface	FJRCKNX1i
WiFi Interface	FJRCWIFI1

Feature explanation

Economy mode
Thermostat setting automatically changes according to the temperature to avoid unnecessary cooling and heating.

10°C HEAT operation
The room temperature can be set to go no lower than 10°C, thus ensuring that the room does not get too cold when not occupied.

Auto-changeover
The unit automatically switches between heating and cooling modes based on your temperature setting and the room temperature.

Up/down swing flaps
The up/down flaps automatically swing up and down.

Automatic fan speed
The micro-computer automatically adjusts the airflow effectively to follow the changes of room temperature.

Auto restart
In the event of a temporary power failure, the air conditioner will automatically restart in the same operating mode as before, once power supply is restored.

Sleep timer
The micro-computer gradually changes the room temperature automatically to afford a comfortable night's sleep.

Program timer
This digital timer allows selection of one of four options:
ON, OFF, ON » OFF or OFF « ON.

Filter sign
Indicates the filter cleaning period by lamp.

Dimensions

(Unit : mm)

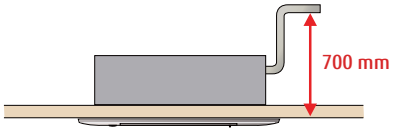

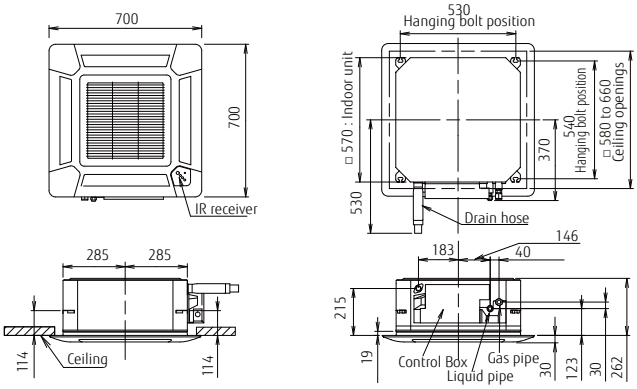

Specifications

(TENTATIVE)

	Indoor	AUYG12LVLB	AUYG14LVLB	AUYG18LVLB	AUYG24LVLA
	Outdoor	AOYG12LALL	AOYG14LALL	AOYG18LALL	AOYG24LALA
Nominal Capacity (kW)	Cooling	3.50 (0.90-4.40)	4.30 (0.90-5.40)	5.20 (0.90-5.90)	6.80 (0.90-8.00)
	Heating	4.10 (0.90-5.70)	5.00 (0.90-6.50)	6.00 (0.90-7.50)	8.00 (0.90-9.10)
UK Total / Sensible Cooling *		3.46 / 2.37	3.96 / 2.70	4.79 / 3.09	5.94 / 4.42
Power Consumption (kW)	Cooling	1.05	1.33	1.62	2.21
	Heating	1.11	1.34	1.66	2.26
EER / COP (Nominal Conditions)		3.33 / 3.69	3.21 / 3.71	3.21 / 3.61	3.08 / 3.54
Pdesign (kW) @ -10°C	Cooling	3.50	4.30	5.20	6.80
	Heating	4.20	4.50	5.20	6.00
SEER	Cooling	6.20	6.40	6.20	5.60
SCOP	Heating (Average)	4.10	4.40	4.20	3.90
Energy Efficiency Class	Cooling	A++	A++	A++	A+
	Heating (Average)	A+	A+	A+	A
Annual Energy Consumption (kWh/a)	Cooling	198	235	293	425
	Heating	1431	1432	1731	2151
Moisture Removal	l/h	1.20	1.50	2.20	2.70
Dimensions (HxWxD) mm	Inner (Ex. Grille)*	245x570x570	245x570x570	245x570x570	245x570x570
	Outer	578x790x300	578x790x300	578x790x300	578x790x315
Net Weight (kg)	Inner (Ex. Grille)*	15	15	15	16
	Outer	40	40	40	44
Room Air Circulation (high) m3/h	Inner	600	680	680	930
	Outer	1780	1910	2000	2470
Power Supply	V-PH-Hz	230 / 1 / 50	230 / 1 / 50	230 / 1 / 50	230 / 1 / 50
Power Supply To		Outdoor	Outdoor	Outdoor	Outdoor
Running Current (A)	Cooling	4.80	6.10	7.20	9.70
	Heating	5.10	6.10	7.40	9.90
Starting Current	A	5.10	6.10	7.40	9.90
Suggested MCB/Fuse	A	10	10	16	16
Interconnecting Cable		3 + E	3 + E	3 + E	3 + E
Remote Control Type		Wireless	Wireless	Wireless	Wireless
Sound Pressure (dB(A) Cooling)	Indoor Q/L/M/H	27 / 30 / 34 / 37	27 / 30 / 34 / 38	26 / 30 / 34 / 38	30 / 36 / 44 / 49
	Outdoor H	47	49	50	52
Sound Power (dB(A) Cooling)	Indoor H	49	50	50	59
	Outdoor H	61	62	62	67
Max Pipe Length	m	25	25	25	30
Max Height Difference	m	15	15	15	20
Refrigerant Charge	m	15	15	15	15
Additional Refrigerant Charge	g/m	20	20	20	20
Pipe Size (inches)	Gas	3/8	1/2	1/2	5/8
	Liquid	1/4	1/4	1/4	1/4
Operating Range (OC)	Cooling	-10 ~ 46	-10 ~ 46	-10 ~ 46	-10 ~ 46
	Heating	-15 ~ 24	-15 ~ 24	-15 ~ 24	-15 ~ 24
Refrigerant		R410A	R410A	R410A	R410A
Grille (to be ordered separately)		UTGUFYDW	UTGUFYDW	UTGUFYDW	UTGUFYDW

*Excludes Grille: Grille dimensions = 50x700x700, Grille weight = 2.6kg

Note
•Cooling/heating capacities are based on the following conditions.

Cooling	Indoor temperature 23°CDB / 16°CWB Outdoor temperature 30°C

- Performance test is in accordance with EN14511
- Seasonal efficiency test is on accordance with EN14825
- Sound power test is in accordance with EN12102

Fujitsu General (Thailand) Co., Ltd. ISO 9001 Certified number: 01 100 89394 ISO 14001 Certified number: 01 104 9245/01
Fujitsu General (Shanghai) Co., Ltd. ISO 9001 Certified number: 01 100 79269 ISO 14001 Certified number: CNBJ311153-UK
Fujitsu General Central Air-conditioner (Wuxi) Co., Ltd. ISO 9001 Certified number: 15914Q10065RAM ISO 14001 Certified number: 15912E10022R3M

•Specifications and design are subject to change without notice for further improvement.
•Actual products' colours may be different from the colours shown in this printed material.

Distributed by :

FUJITSU GENERAL AIR CONDITIONING (UK) LTD
Unit 150 Centennial Park, Centennial Avenue, Elstree, Herts. WD6 3SG
www.fujitsu-general.com/uk
Tel: +44 (0)208 731 3450 Fax: +44 (0)208 731 3451

Copyright© 2016 Fujitsu General Limited. All rights reserved. 3EFNP10-1510E